TECHNICAL SPECIFICATIONS

FOR

MAUMEE RIVER WASTEWATER TREATMENT PLANT (WATERVILLE, OHIO)
POWER POLE REPLACEMENT AND REPAIR

FOR THE

LUCAS COUNTY, OHIO

JOB NO. 3063-003

MARCH, 2015

BID SCHEDULE

MAUMEE RIVER WASTEWATER TREATMENT PLANT POWER POLE REPLACEMENT AND REPAIR

LUCAS COUNTY, OHIO

Ref. No.	Description	Estimated Quantity	Unit	Labor Unit Price	Material Unit Price	Total Unit Price	Total Price
1	Replacement and/or Repair of the Listed Power Poles, Complete	1	Each	$	$	$	$
	Unit Price per Each in Words						

TOTAL BID PRICE
(Subject to Correction) $

SECTION 01010

SUMMARY OF WORK

PART 1 GENERAL

1.1 SCOPE

A. Without limiting the commercial requirements of the Contract Documents, this Work shall conform to the requirements specified herein.

B. The documents encompassed by these specifications and the attached drawings outline the work and/or materials required to furnish, install, alter, and/or expand the electrical system to provide a complete, finished and operational project. This shall include all associated cutting, patching, excavation, backfill, compaction, concrete bases, manholes, supports, auxiliary steel, inserts, anchors, chases, sleeves, etc., required to accomplish all portions of this Work, without relying upon other trades, or the work described in other divisions of the specifications, unless it is specifically stated in Division 16 or on the Electrical Drawings, that an item will be provided by another trade. Wherever the word "provide" is used, it shall be understood to mean: furnish and install complete and ready for proper use.

C. Description of Project

1. Lucas County is undertaking a maintenance repair and replacement of existing electric 12.47 KV overhead distribution poles and equipment at their Maumee River Wastewater Treatment Plant.

D. Location of Project

1. The project is located at 5758 North River Road, Waterville, Ohio.

E. Work Covered by this Specification

1. These specifications cover the furnishing of all labor, materials, expendable tools and equipment, and all other services required for the furnishing and installation of poles and overhead

distribution pole line materials and all other related work associated with improvements to the County's Wastewater Treatment Plant Electric Distribution System.

2. Provide all specified poles, equipment, materials and hardware unless otherwise indicated on the drawings or in these specifications.

3. Coordinate and schedule work with the owner and First Energy, if required.

F. Owner Furnished Equipment and Materials

1. The Owner will furnish the following equipment and materials to be installed by the contractor:

a. None

G. Work by Others

1. The Owner will furnish all required rights-of-way and construction access.

PART 2 PRODUCTS

Not applicable

PART 3 EXECUTION

3.1 SCHEDULE

A. The work shall be completed no later the timeline below.

1. All work shall be substantially completed on or before August 1, 2015 and completed and ready for final payment in accordance with paragraph 14.07 of the General Conditions on or before August 30, 2015.

B. The Contractor's indicated completion schedule will be a factor in the proposal evaluation of this Contract.

3.2 SEQUENCE OF WORK

B. The Contractor shall coordinate his sequence of work with the availability of circuit outages for the wastewater treatment plant.

C. The contractor shall coordinate the modifications and outage with the Owner.

3.3 OVERTIME

A. It is the intent that the majority of the Work specified be performed during normal working hours with sufficient manpower to complete the project on schedule. Overtime shall be performed by the Contractor at his expense to expedite the Contractor's Work whenever the Contractor delays the Project Schedule.

B. The modifications of the service will require prescheduling with the Owner and First Energy. Some of the work will have to be performed during evening hours and on weekends as required for circuit outages. Contractor shall be prepared to work during allowable outage dates and time. The costs associated with only premium time required for connections when scheduled by the owner outside normal working hours will be paid by the Owner.

C. If the Owner or Engineer requests additional overtime, the Contractor will be reimbursed for his additional premium costs only.

END OF SECTION

SECTION 01030

ALTERNATES

PART 1 GENERAL

1.1 SCOPE

A. Include prices for the following Alternates listed in the Schedule of Alternates in the designated spaces on the Bid Form.

1.2 DEFINITIONS

A. Alternate

1. An alternate is an amount proposed by bidders and stated on the Bid Form for certain work defined in the Bidding Requirements that may be added to or deducted from the Base Bid amount if the Owner decides to accept a corresponding change in either the amount of construction to be completed or in the products, materials, equipment, systems, or installation methods described in the Contract Documents. Any or all of the deduct alternates may be selected by the Owner at anytime, even after contract is executed for the prices indicated on the Bid Schedule.

B. Cost or Credit for Alternate

1. The cost or credit for each alternate is the net addition to or deduction from the Contract Sum to incorporate the Alternate into the Work. No other adjustments are made to the Contract Sum.

1.3 PROCEDURES

A. Coordination

1. Modify or adjust affected Work as necessary to completely and fully integrate that Work into the project.

a. Include as part of each alternate, miscellaneous devices, accessory objects, and similar items incidental to or required for a

complete installation whether or not mentioned as part of the Alternate.

B. Execute

1. Execute accepted alternates under the same conditions as other Work of this Contract.

C. Schedule

1. A "Schedule of Alternates" is included at the end of this Section. Specification Sections referenced in the Schedule contain requirements for materials necessary to achieve the Work described under each alternate.

PART 2 PRODUCTS

Not applicable

PART 3 EXECUTION

3.1 SCHEDULE OF ALTERNATES

A. None.

END OF SECTION

SECTION 01040

COORDINATION

PART 1 GENERAL

1.1 COORDINATION

A. Construction Coordination Operations

1. Coordinate construction operations included in various Sections of these Specifications to assure efficient and orderly installation of each part of the Work. Coordinate construction operations included under different Sections that depend on each other for proper installation, connection, and operation.

a. Schedule construction operations in the sequence required to obtain the best results where installation of one part of the Work depends on installation of other components, before or after its own installation.

b. Coordinate installation of different components to assure maximum accessibility for required maintenance, services, and repair.

c. Make provisions to accommodate items scheduled for later installation.

2. Where necessary, prepare memoranda for distribution to each party involved, outlining special procedures required for coordination. Include such items as required notices, reports, and attendance at meetings.

3. Coordinate construction operations with Owner.

PART 2 PRODUCTS

Not applicable

PART 3 EXECUTION

3.1 NOTIFICATIONS

A. The Contractor shall be responsible to contact all utilities whose installations may be encountered during the excavation and construction and to locate such utilities whether or not they are identified in the specification or on the drawings. The Contractor shall be responsible for damages and required repairs to all utilities as a result of his Work.

B. Notify the following Agencies and/or utilities in advance of excavation or construction in areas in which other utilities may be encountered.

1. Ohio Utilities Protection Service 1-800-362-2764
2. Fiber Optic Companies
3. Lucas County Utilities
4. Telephone Company - Verizon
5. Cable Television Company - Time Warner, Buckeye Cable System
6. Gas Utility
7. Electric Utility - First Energy
8. Lucas County Plant Personnel

3.2 PROTECTION

A. Material and Equipment

1. Equipment shall be suitably protected during handling and storage in accordance with manufacturer's recommendations.

2. Finished surfaces shall be protected against impact, abrasion, discoloration, and other damage. Surfaces which are damaged shall be repaired.

3. All equipment and materials shall be protected against moisture and water damage.

4. Machine surfaces, bearings, unfinished surfaces and like items shall be thoroughly cleaned and coated with rust preventative compound and fully protected with wood, metal, or other substantial covering.

B. Owner's Facilities

1. During the construction of the Work the Contractor shall be responsible for the proper protection of the Owner's facilities and equipment, and for damage which is caused by this Contractor or his subcontractors.

2. The Lucas County Wastewater Treatment Plant will be in continuous operation during the period of construction of the Work covered by these specifications. Perform the Work covered by these specifications at such times, in such manner, and with such force, in full cooperation with the employees of the Lucas County as to expedite the Work and minimize interruption or restriction of services. Unavoidable interruptions for the connection of the new Work to existing shall be scheduled in advance and all Work shall be arranged to minimize the duration of such interruptions.

3. Take care when hauling materials to locations to choose routes across private property which shall result in a minimum of damage and inconvenience to the property owner. Replace all fences removed for access.

4. No materials are to be left in the field at the completion of construction.

5. The Owner will furnish all construction access reasonably required by the Contractor.

6. After construction is completed, the Contractor shall be responsible for all restorations.

3.3 LAYING OUT AND FIELD MEASUREMENTS

A. Take all measurements. Lay out all Work. Field verify and be responsible for all dimensions. Contractor shall hire the services of a Registered Surveyor, where required, to ensure that all circuits installed by the Contractor are located within the boundaries of the applicable private and public rights-of-way.

B. Dimensions shown on the drawings locating existing work are for guidance only and are to be checked in the field

and verified before fabrication of material for construction.

C. Minor deviations from dimensions or arrangements shown shall be accounted for as part of this Work.

D. Exercise special care in checking existing construction to ensure proper connection to the existing work and equipment and to avoid interferences.

E. Any interferences disclosed by field measurements and detailing shall be reported to the Engineer for correction before fabrication of the Work. All extra costs incurred to correct any interferences appearing after the fabrication of the Work shall be borne by this Contractor.

F. Locations of all poles shall be coordinated with Lucas County before setting.

G. Any required hand digging for setting poles shall be included within the bid.

END OF SECTION

SECTION 01044

SAFETY REGULATIONS AND RESTRICTIONS

PART 1 GENERAL

1.1 SAFETY REGULATIONS

A. During the progress of the Work, this Contractor shall be responsible for the protection of his personnel and all other persons from injuries which may result from Work under this Contract.

B. All Work performed for this Contract shall conform to the Owner's requirements and federal, state or local safety requirements whichever are more stringent. Temporary safety construction requirements shall be maintained until no longer required and then removed by this Contractor.

C. Whenever the Work of this Contract requires the use of oxyacetylene and/or electric equipment for welding or cutting, the Contractor shall exercise precautions in accordance with NFPA Standard 51 B, "Standard for Fire Protection in Use of Cutting and Welding Processes."

1.2 NOISE RESTRICTIONS

A. During Construction

1. Contractor shall comply with OSHA requirements and all other applicable laws, rules and regulations, pertaining to the control of noise.

1.3 ROADWAY USE

A. Contractor is responsible for verifying the allowable load limits of the roadways, alleyways, driveways, etc. with the authority having jurisdiction and conforming to the load limits with their vehicles, materials, and equipment.

B. Repair of damages caused by the contractor shall be the responsibility of the contractor.

PART 2 PRODUCT

Not applicable

PART 3 EXECUTION

Not applicable

END OF SECTION

SECTION 01095

REFERENCE STANDARDS

PART 1 GENERAL

1.1 LIST OF REFERENCE STANDARDS

A. All Work shall conform to the requirements of the latest applicable issue and addenda (in effect on the bid date) of the codes and standards issued by the organization or agencies as listed in the Schedule of References.

B. The applicable standards shall be considered minimum requirements. In the event of conflict between the standards and the detailed requirements of these specifications, the more stringent shall govern.

C. Schedule of References

ACI	American Concrete Institute
ANSI	American National Standards Institute
ASTM	American Society for Testing and Materials
CFR	Code of Federal Regulation
EPA	Environmental Protection Agency
ICEA	Insulated Cable Engineers Association
IEEE	Institute of Electrical and Electronics Engineers
NEC	National Electrical Code
NEMA	National Electrical Manufacturers Association
NESC	National Electrical Safety Code
NFPA	National Fire Protection Association
OSHA	Occupational Safety and Health Administration
Federal Codes	
State of Ohio Codes	
ODOT	Ohio Department of Transportation
Lucas County	

PART 2 PRODUCT

Not applicable

PART 3 EXECUTION

Not applicable

END OF SECTION

SECTION 01200

PROJECT MEETINGS

PART 1 GENERAL

1.1 SCOPE

A. Meetings will be held during the progress of the construction under this Contract. The Contractor shall attend and provide the required discussion at the meetings. Engineer will administer the meetings.

1. Progress Meetings

a. Progress meetings will be held at the job site as requested by the Engineer or Owner. The meeting shall be attended by the Owner, Engineer, Contractor, its superintendent, subcontractors or other entity concerned with current progress or included in planning, coordination or performance of future activities.

2. Coordination Meetings

a. Coordination meetings will be held as may be required to coordinate specific aspects of the project work.

PART 2 PRODUCT

Not applicable

PART 3 EXECUTION

Not applicable

END OF SECTION

SECTION 01311

SCHEDULES AND REPORTS

PART 1 GENERAL

1.1 SCOPE

A. Progress Schedule

1. Submit within ten (10) days of Contract award a detailed schedule. The Progress Schedule shall be updated monthly or more often as requested by the Engineer to reflect necessary changes.

2. The Progress Schedule shall be detailed showing Work tasks, milestones, durations, delivery dates and completion dates.

B. Reports

1. Test Reports for Equipment and Cables

a. Provide three (3) certified copies of test reports for each test performed. The test report shall include date, time, test personnel, weather conditions, abnormal findings in addition to the data determined during the test.

PART 2 PRODUCT

Not applicable

PART 3 EXECUTION

Not applicable

END OF SECTION

SECTION 01501

TEMPORARY FACILITIES

PART 1 GENERAL

1.1 OWNER FURNISHED FACILITIES AND SERVICES

A. Operating personnel for operation of the electrical system equipment during preliminary placement of systems into operation.

1.2 CONTRACTOR FURNISHED FACILITIES AND SERVICES

A. Furnish all facilities including services required but not limited to the following:

1. Necessary toilet facilities and change rooms and supplies as required for his employees and the employees of any subcontractor.

2. Storage shed for protection and security of tools, materials and other equipment.

3. Portable generators for construction power in the construction area.

4. Temporary wiring from the individual points of electrical supply for use by the Contractor. Provide all required overhead conductors and supports for routing the electrical energy to the construction areas including required short circuit protection. The complete construction power installation shall conform to the National Electric Code and be approved by the Owner. Contractor to obtain all required permits for the temporary power.

5. Electrical energy for all construction usage and office requirements, shall be arranged for and be the responsibility of the Contractor.

6. Compressed air needed for construction.

7. All equipment, tools, labor, and expendables required for safety, cleanup, testing, dewatering and freeze protection.

8. All equipment, fuel, electrical power, and construction required for heating Contractor furnished and/or erected equipment and material.

9. All road marking, flagging, traffic control signal, and traffic control required to meet state and local requirements for activity at the construction area.

B. Facilities as listed above shall be of substantial construction and suitable in arrangement and appearance and shall be maintained in a neat, sanitary condition at all times. All such facilities shall be subject to the approval and control of, and shall be placed where directed by the Owner. Portable structures will be acceptable.

C. Completely remove the above facilities upon completion of all Work and when notified to do so by the Owner.

D. All charges for long distance telephone service will be paid for by the person placing such calls.

PART 2 PRODUCT

Not applicable

PART 3 EXECUTION

Not applicable

END OF SECTION

SECTION 01600

MATERIALS AND EQUIPMENT

PART 1 GENERAL

1.1 MATERIAL

A. Asbestos Materials

1. All materials furnished under this Contract shall not contain any asbestos materials.

B. EQUIPMENT

1. Equipment shall be installed according to manufacturer's instructions and drawings.

2. All items of equipment shall be new and those of the same specifications shall be duplicates of one another to permit maximum interchangeability of assemblies and parts.

PART 2 PRODUCT

Not applicable

PART 3 EXECUTION

Not applicable

END OF SECTION

SECTION 01720

PROJECT RECORD DOCUMENTATION

PART 1 GENERAL

1.1 SCOPE

A. Maintain at the job site a separate set of Engineer's drawings which shall be marked daily to show all changes or revisions occurring during construction. Upon completion of the project, this marked record set shall be given to the Engineer.

PART 2 PRODUCT

Not applicable

PART 3 EXECUTION

Not applicable

END OF SECTION

SECTION 16052

BASIC ELECTRICAL MATERIALS AND METHODS FOR TRANSMISSION AND DISTRIBUTION

PART 1 GENERAL

1.1 SCOPE

A. Furnish all labor, supervision, materials, tools (expendable or otherwise), and all other services required for installing electrical materials, equipment, and systems specified in this specification and as shown on the drawings.

B. Provide all testing services required for the electrical installation.

C. Energize and put into service all electrical equipment installed and/or wired by this Contractor. Coordinate this work with the Owner and Engineer.

D. The bid documents indicate and summarize the overall electrical design requirements of this project. The drawings are diagrammatic and are not intended to indicate construction details and routing unless specifically indicated. The specification establishes minimum performance, product, and installation requirements. In addition to the specified and indicated performance and quality requirements, perform installation work consistent with the overall design. Install and verify all connections. Ensure all necessary components and conductors are installed to provide a complete operating electrical system.

E. Contact utilities presently attached to poles being removed or placed and coordinate and schedule the transfer of the utilities, circuits, and equipment.

F. Contact utilities to whose poles new electrical equipment and circuits will be attached and coordinate and schedule construction with the utilities.

1.2 SUBMITTALS

A. Provide three (3) sets of shop drawings or catalog cuts for all equipment and materials furnished under this contract. Catalog cut sheets shall be clearly marked indicating specific piece being furnished.

PART 2 PRODUCT

Not applicable

PART 3 EXECUTION

3.1 POWER SYSTEMS INSTALLATION

A. Install power systems as specified and as shown on the drawings. Material and procedures shall be as specified elsewhere within the specification and as shown on the drawings.

3.2 WIRING METHODS

A. Furnish, install and connect the electrical circuits to the equipment and devices as shown on the drawings.

END OF SECTION

SECTION 16055

RECEIPT AND INSTALLATION OF MATERIALS

PART 1 GENERAL

1.1 SCOPE OF WORK

A. Provide all required labor, apparatus, expendable tools and be responsible for the receipt, unloading, conveyance, storage, protection, installation and wiring for specified material and devices being furnished by the Owner.

B. All equipment and material shall be properly stored and protected. The Owner will not be responsible for any loss or damage of any equipment or material stored by this Contractor.

C. Install, and wire the equipment shown on the drawings and listed in this specification.

PART 2 PRODUCTS

Not Applicable

PART 3 EXECUTION

3.1 MATERIAL CONVEYANCE AND INSTALLATION

A. Materials and equipment being furnished under the contract shall be received, unloaded, and conveyed to its designated location under this contract.

B. Materials shall be moved into final position as shown on the Engineer's drawings and shall be assembled, shimmed, leveled, aligned and anchored.

C. Furnish all required labor, all necessary timber, blocking, rollers, tackle, skids, tools, conveyances and other rigging equipment for loading, transferring and unloading of the material and equipment. All such rigging equipment shall remain the property of this Contractor and shall be removed immediately when no longer needed.

D. Install and wire all equipment and material.

E. All equipment to be placed in storage prior to installation shall be properly protected.

F. Security and protection of the construction equipment and materials are the responsibility of the contractor.

END OF SECTION

SECTION 16350

WOOD POLES AND ASSOCIATED MATERIALS

PART 1 GENERAL

1.1 SUMMARY

A. This section includes wood poles, framing materials, and anchors and guys.

1.2 SCOPE OF WORK

A. Furnish and install material in accordance with these specifications and drawings.

PART 2 PRODUCTS

2.1 MATERIAL FURNISHED BY THE CONTRACTOR

A. Wood poles - Poles shall be southern yellow pine treated with pentachlorophenol as a preservative. The poles shall be of the length and class as indicated on the drawings. Poles shall be field gained and bored and saturated with preservative. Contractor is responsible for proper storage and handling of poles and preservatives to meet federal and state regulations.

B. Cross Arms - Cross arms shall be fir with penta treated 3 5/8" x 4 5/8" and 8'-0" or 10' - 0" long, 6 pin.

C. Cross Arm Braces - Braces shall be wood for 38" spacing, 18" drop unless otherwise specified.

D. Guy anchors shall be power screw type with 8" and 10" helix rated for 20,000 lbs.

E. All other material including required insulators, bolts, washers, nuts, grounds, conductor ties, brackets, switches, and miscellaneous materials required for a complete installation.

F. All attachment and hardware material shall be hot dipped galvanized.

PART 3 EXECUTION

3.1 CONSTRUCTION STANDARDS

A. The construction shall be installed to Class B Standards.

3.2 DELIVERING, TRANSFERRING AND STORING MATERIAL

A. Furnish all skilled and common labor, all necessary timber, blocking, rollers, tackle, skids, tools, conveyances, and other rigging equipment for delivering, loading, transferring, and unloading of all material. All such rigging equipment shall remain the property of the Contractor.

B. All rigging equipment shall be removed immediately when no longer needed.

3.3 SETTING OF WOOD POLES

A. The depth of setting shall be 10% of the pole length plus 2' unless shown otherwise on the drawings.

B. Pole excavations shall be backfilled full depth with thoroughly tamped soil. Complete backfill to grade level before installing conductors.

C. All poles shall be set in the plumbed position.

D. Where rock excavation is required, notify the Owner's representative so that the required setting depths and the amount of rock excavation can be verified. Where rock excavation is required, the Contract price will be adjusted. Rock excavation shall consist of excavating igneous, metamorphic and sedimentary rock and hardpan which cannot be excavated without continuous drilling and blasting or continuous use of a ripper or other special equipment and all boulders of V¶ cubic yard or more in volume. Hardpan is defined as cemented soil layers. The hardpan definition shall not be applied to hard clay layers that are not cemented.

E. Where rock excavation is encountered within the grading limits, the surface of the rock shall be sufficiently exposed to permit adequate measurements to be taken before the rock excavation is started.

F. Hand digging required for setting poles shall be included in the bid.

3.4 WOOD POLE OVEREXCAVATION

A. If the soil is not suitable for supporting the required loadings at the normal setting depth, the Engineer shall determine the depth of overexcavation required.

B. Crushed stone or gravel shall be placed in the overexcavation to bring the bottom of the hole to the proper elevation. The stone or gravel must be thoroughly tamped using mechanical tampers.

3.5 WOOD POLE STRUCTURE ASSEMBLY AND ERECTION

A. The insulators, crossarms, and miscellaneous hardware shall be assembled in accordance with the drawings.

B. Field bore all holes required to install hardware associated with the circuits and guying.

C. All through bolts having an extension of greater than 2" beyond the nut shall be cut to less than 2" and the cut end of the bolt shall be painted with "Galvanox" paint.

D. It is preferred that the assembled pole structure be raised as a complete unit and placed in the excavation. The balance point must be field determined, since it may vary for each pole.

E. All adhesive labels and tape shall be removed from insulators.

3.6 STRUCTURE SETTING TOLERANCES

A. Rotational Tolerance

1. Poles are to be oriented such that the longitudinal axis of the crossarms and post insulators wilt be perpendicular to the direction of the line at tangent structures and will bisect the interior angle at line deflection points.

2. The ends of the crossarms and post insulators shall not deviate from the above orientations, because of the rotation of the pole by more than 4".

B. Elevation Tolerances

1. The elevation of the pole shall not vary from that specified by more than 2".

C. Transverse Alignment Tolerance

1. The longitudinal axis of the pole shall be within 2" of the center line as stated.

D. Vertical Alignment Tolerance

1. Unless otherwise specified, the installed pole shall not vary from a true vertical (plumb) alignment by more than one-half (½) of one percent (1%) of the overall length of the pole in either the transverse or in line plane.

3.7 GUYING

A. Permanent Guys

1. The number and size of guys shall be as specified on the construction drawings.

2. All guys shall be installed and tightened before the conductors are installed, proper allowance being made so that when the conductors are pulled in, the pole will be in correct position. If there is more than one (1) guy on a pole, an adjustment should be made to equalize the tension in the guys so that each guy will take a proportional share of the load.

3. All guys shall be adjusted after sagging and before tying in conductor.

B. Temporary Guys

1. Temporary guys shall be installed at locations where temporarily unbalanced stresses occur and where no permanent guying is specified.

2. The temporary guys shall be of sufficient strength to compensate for unbalanced stress on the pole. If, in the opinion of the Owner or Engineer, the temporary guys placed by the Contractor are

inadequate for the existing conditions, they may require additional temporary guying.

3. Temporary guying, if required, shall be installed before stringing or sagging phase conductors.

4. Temporary guys and anchors shall be removed by the Contractor after new conductors have been installed in their permanent positions.

3.8 POWER SCREW ANCHOR INSTALLATION

A. 20,000 Pound Anchors

1. The anchors shall be installed to have a minimum holding strength of 20,000 pounds. This holding strength is achieved when the anchors are installed with a minimum of one (1) - 5' anchor rod extension and the anchor is installed with a minimum torque of 2,000 foot pounds. A torque of 2000 foot pounds is achieved when shearing of the torque indicator occurs when four (4) stranded 500 foot-pound pins have been loaded into the torque indicator.

2. Add additional 5' extensions until a minimum of 2,000 foot-pounds of torque is achieved.

3. When more than one (1) - 5' extension is required, the Contract price shall be adjusted.

3.9 ROCK ANCHORS

A. Where rock anchors are required, the Contract price will be adjusted.

END OF SECTION

SECTION 16351

OVERHEAD CONDUCTORS AND ASSOCIATED MATERIAL

PART 1 GENERAL

1.1 SUMMARY

A. This section includes overhead conductors and associated materials.

1.2 SCOPE OF WORK

A. Install material being furnished under this contract in accordance with these specifications.

PART 2 PRODUCTS

2.1 MATERIAL FURNISHED BY THE CONTRACTOR

A. The Contractor shall furnish all of the required conductor and accessories as specified and required for a complete and operational system.

B. Phase conductors for 12.47 KV circuits shall be ACSR as indicated on the drawings. Neutral conductor for the 12.47 KV circuit shall be ACSR as indicated on the drawings.

PART 3 EXECUTION

3.1 DELIVERING, TRANSFERRING AND STORING MATERIAL

A. Furnish all skilled and common labor, all necessary timber, blocking, rollers, tackle, skids, tools, conveyances, and other rigging equipment for delivering, loading, transferring and unloading of all material. All such rigging equipment shall remain the property of the Contractor.

B. All rigging shall be removed immediately when no longer needed.

C. Reels of conductor, when in storage sites or stored along the right-of-way, shall be placed on planking or other

suitable material to keep them from sinking into the ground.

D. Reels shall be lifted, using equipment of suitable capacity for the weight involved, which will in no way damage the conductor or reels. When the reels are lifted by the axle supported from above, a spreader bar shall be used to prevent conductor and reel damage by inward pressure on the reel flange. In no case are the reels to be rolled on their rims or laid on their sides.

E. Conductor reels in transit from the storage site to the delivery point on the circuit right-of-way shall be securely tied down to prevent rolling.

F. Full reels shall be transported with lagging installed.

G. Partial reels shall be transported with suitable protection against sand, stones, mud and other sources of damage.

3.2 STRINGING AND SAGGING OF CONDUCTOR

A. Conductors

1. All conductors shall be entirely free from crooks and kinks when strung in position and shall not hang loosely between supports.

2. Exercise diligent care in the handling and installation of all conductors to prevent damage to the conductor and to minimize scrap.

B. Stringing Blocks

1. All stringing blocks shall have elastomer lined grooves. The minimum radius and depth of the grooves and the minimum diameter of the blocks shall conform to the recommendations contained in IEEE Standard 524 - 1992, IEEE Guide to the Installation of Overhead Transmission Line Conductor.

2. The stringing blocks shall be inspected periodically to ensure that the blocks are intact and that there is not foreign material embedded in the grooves that will damage the conductor. All foreign materials shall be removed from conductors.

The blocks used for conductor stringing shall be equipped with well lubricated ball or roller bearings and shall have grooves of suitable size and shape for the cable being strung.

3. Choose the proper strength block for each application.

4. The equipment and methods used for stringing the conductors shall be such that the conductors and poles will not be damaged.

5. During stringing and sagging operations, the pulling device or catchoff anchor shall be located, unless otherwise approved by the Owner, so that any cable under tension will have a slope of not more than 1' vertical to 3' horizontal.

C. Guard Poles

1. Guard poles and other temporary structures shall be installed where required to maintain the safety of the wire stringing operation.

2. Guard poles will be furnished by the Owner and will be returned to the Owner's storage site in good condition.

3. Guard poles shall be set at minimum height so that conductors will clear. At no time should the conductors be allowed to ride on the guard structures.

D. Sagging

1. Sag all overhead conductors in conformance with the stringing sag tables included on the drawings. Sags shall not be less than specified or exceed by more than 3" the sag specified.

2. Sagging operations shall not be performed when wind or other adverse weather conditions would prevent accurate sagging to match existing installation.

3. It is preferred that sags shall be determined by the sight-and-sag method.

4. Procedures for use of tension dynamometers in lieu of sight-and-sag method shall be submitted to the Engineer for approval prior to its use.

5. Furnish to the Engineer a sagging report which shall contain as a minimum the following information for each sagging operation.

   a. Line section sagged; inclusive structure numbers.
   b. Date of sagging operation.
   c. Conductor temperature.
   d. Check span(s) in which sag measured, inclusive structure numbers.
   e. Length of check span(s), by field measurement.
   f. Sag installed in check spans for each conductor type and size.

3.3 DEAD ENDING AND CLIPPING CONDUCTOR

A. Angle and dead end points shall be tied in before tangent structures.

3.4 SPLICES

A. All tension splices shall be a minimum distance of 15' from the nearest support, shall be "automatic" type line splices and shall be low resistant type, capable of holding the ultimate strength of the conductor without failure.

B. Conductor jumpers shall be made continuous wherever feasible.

C. Where jumper splices are required, only one (1) splice per jumper shall be used.

D. Tension splices and jumper splices shall be installed in accordance with the manufacturer's instructions.

3.5 PHASING

A. Arrange the positions of the phase conductors to be compatible with the phasing of the Owner's existing circuits.

B. Verify the phasing at all tie-in points before closing jumpers at the tie-ins.

END OF SECTION

SECTION 16352

TRANSFER AND REMOVAL OF EXISTING CIRCUITS AND EQUIPMENT

PART 1 GENERAL

1.1 SUMMARY

A. This section includes the transfers and removals of existing circuits and equipment.

1.2 SCOPE OF WORK

A. Furnish all labor and materials required for the transfer of existing circuits and equipment between existing and new structures and for the removal of existing poles and materials as specified herein, as indicated on the drawings or as required to make the job a complete installation.

PART 2 PRODUCTS

2.1 MATERIAL REQUIRED FOR TRANSFERS

A. The Contractor shall furnish all materials required for the transferring of existing circuits.

PART 3 EXECUTION

3.1 TRANSFER OF EXISTING CIRCUITS AND EQUIPMENT

A. All existing transformers, poles, cables, insulators, and hardware which are removed shall be hauled to the Owner's storage site located at the Lucas County Maumee River Wastewater Treatment Plant at 5878 North River Road, Waterville, Ohio. Any obviously damaged or broken hardware or insulators shall be disposed of by the contractor.

B. The material used for transferring circuits and equipment, such as necessary wire, splices, bolts, and tie wire shall be of the type and substance to assure proper support of the transferred equipment.

C. Temporarily relocate existing circuits to permit the installation of new arms, insulators, guys, and conductors and leave existing circuits in a safe condition.

D. Install new anchors and rearrange existing guys, as required, to maintain proper clearances between new conductors and all guys.

E. Where anchor rods are to be abandoned, cut off the rods at least 12" below grade.

F. Backfill and tamp all holes in the ground resulting from the removal of poles.

END OF SECTION

SECTION 16354

MISCELLANEOUS WORK

PART 1 GENERAL

1.1 SUMMARY

A. This section includes miscellaneous work.

1.2 SCOPE OF WORK

A. Furnish materials, labor, and required services for tree trimming and the restoration of damage to property, resodding of damaged grass areas, painting, and clean up to provide for a complete project.

PART 2 PRODUCTS

Not Applicable.

PART 3 EXECUTION

3.1 RESTORATION OF DAMAGE TO PROPERTY

A. Be responsible for any or all damage to utilities or other facilities such as sewers, waterlines, gas lines, fiber optic cables, underground or overhead electric power or communication line and the like, due to the negligence of this Contractor or his employees.

B. Promptly repair and restore all structures, including fences, damaged by this Contractor during the progress of the Work. In lieu of such repairs, and if agreeable to the Owner of the damaged structure, the Contractor may make a fair and equitable monetary compensation to such Owner.

C. Wherever lawns or shrubs or other decorative growth are damaged by this Contractor, during the progress of the Work, promptly correct such property damage by replacing the damaged growth. In lieu of such replacement, and if agreeable to the Owner of the damaged growth, the Contractor may make a fair and equitable monetary compensation to such Owner.

D. Make fair and equitable payments for any crops damaged by this Contractor. This requirement does not apply to crops located on the Owner's right-of-way.

3.2 SODDING

A. Furnish all labor, materials, transportation, and sod required to repair all mown lawns, maintained by both the Owner and private property owners damaged in any manner during progress of his Work.

B. The sod furnished shall be Kentucky or Canadian blue grass sod.

C. Sod shall be kept moist during handling and shall be thoroughly moistened after it is laid.

D. After laying, the sod shall be sprinkled thoroughly and tamped with suitable sod tampers sufficient to incorporate the sod with the sod bed and ensure tight joints between sections or strips.

E. Upon completion of the Work, the surface of the sod shall coincide with existing grade.

F. No sod shall be placed during freezing weather nor shall any sod be placed on frozen ground.

G. Guarantee the sodding as placed for a period of one (1) year. During that time, any areas in which the sod dies or fails to grow shall be torn up and resodded at no additional cost to the Owner.

3.3 PAINTING

A. Any equipment marred or scratched by this Contractor shall be touched up or repainted by this Contractor using paint similar in color and texture to that used originally on the equipment.

3.4 CLEAN UP

A. Excess excavated materials resulting from the setting of poles shall be spread over the area around and adjacent to the poles within the limits of the right-of-way if the area conditions permit.

B. In all other areas including streets, alleys, and lawns, all excess materials shall be removed from the premises.

C. Material placed around the poles shall br graded to slop away from the poles. Care shall be taken to keep excavated material out of drainage ditches.

D. All stones, in excess of 1" diameter, turned up during construction, shall be removed from the premises.

E. Clean up and remove all debris, excess earth, and rubbish that may accumulate in connection with the work under this contract. Streets, alleys, and private property must be kept clear and free from rubbish at all times and must be left in a neat and orderly condition at the end of the each day's work.

F. Excess earth placed around new poles shall be disposed of when directed by the Owner.

G. Ruts caused by the Contractor, including ruts at the Owner's storage site, shall be leveled to the satisfaction of the Owner.

3.5 FENCES

A. Any fences temporarily opened for construction access shall be restored to their original condition at the end of the construction period.

END OF SECTION

SECTION 16982

TESTING AND INSPECTION

PART 1 GENERAL

1.1 PERFORMANCE OF WORK

A. The performance of the testing and inspection shall be the complete responsibility of this Contractor. This Contractor's scope of work shall include the testing of all equipment and 15 KV cables being installed as part of this Contract.

1.2 CONTRACTOR'S SCOPE

A. Provide visual and electrical tests and inspections to cables, circuits, equipment and specified construction as normally required for this type of project and as hereafter specified.

B. Engage the services of a recognized testing company for the purpose of performing specified tests and inspections. The testing company shall provide all required material, equipment, labor and technical supervision to perform the calibrations, tests and inspections. As a minimum, the testing procedures shall follow the Acceptance Testing Specifications for Electrical Power Distribution Equipment and Systems as published by the National Electrical Testing Associations, Inc. The testing company shall meet Federal OSHA criteria for accreditation of testing companies, Title 29, Part 1907 or approved equal. This Contractor shall submit to the Engineer for approval the name of their proposed testing company and proof of their qualifications. The testing company must be approved by the Owner before any testing is started.

C. Three (3) copies of a written report shall be submitted to the Engineer for each test (or services of tests) and inspection. The reports shall include, but not be limited to the following: date, description of equipment tested, description of tests performed, test results, conclusions and recommendations. The reports shall be submitted within seven (7) days after the test is performed unless otherwise approved by the Engineer.

D. All testing and inspections shall be coordinated and scheduled with the Owner or Engineer prior to starting the work.

E. The Owner and Engineer reserve the right, at their discretion to perform additional testing and inspection to each piece of equipment, device and circuit, including the removal and replacement of wires as is required for proper checking and testing.

PART 2 PRODUCTS

2.1 TESTING EQUIPMENT

A. Provide all necessary testing equipment and materials for the execution of the testing programs. The testing equipment shall remain the property of this Contractor.

PART 3 EXECUTION

3.1 EQUIPMENT TESTING

A. Functionally test equipment installed per manufacturer's recommendation prior to energizing and after energizing.

B. Program the equipment controls and enter settings.

C. Test the calibration and operation of the controls to verify proper operation.

3.2 ELECTRICAL CABLE TESTING

A. Furnish all required equipment, material and labor for performing the following cable tests. All tests shall be made with the cable/conductor disconnected from the equipment and shall be done in the presence of the Owner or the Engineer.

B. Perform a conductor to conductor and a conductor to ground 1000 volt DC megger test to each 15 KV power cable after installation but before terminations are made.

C. On all cable rated 15,000 volts, the following tests shall be performed:

1. Megger tests as described above, after the terminations and splices are completed.

2. High voltage direct current test in accordance with the cable manufacturer's recommendations.

3. The tests shall be in conformance with the IPCEA specifications.

4. Megger test as described above after the high voltage tests are completed.

D. Cables, splices, and terminations that were installed under this Contract, failing under the above tests shall be replaced at the total expense to this Contractor.

END OF SECTION

ANY INFORMATION OR DATA ON THIS DRAWING IS NOT INTENDED TO BE SUITABLE FOR REUSE BY ANY PERSON, FIRM OR CORPORATION OR ANY OTHERS ON EXTENSIONS OF THIS PROJECT OR FOR ANY USE ON ANY OTHER PROJECT. ANY REUSE WITHOUT WRITTEN VERIFICATION AND ADAPTATION BY THE ENGINEER, ARCHITECT OR SURVEYOR FOR THE SPECIFIC PURPOSE INTENDED WILL BE AT THE USERS SOLE RISK AND WITHOUT LIABILITY OR LEGAL EXPOSURE TO THE ENGINEER, ARCHITECT OR SURVEYOR.

LUCAS COUNTY MAUMEE RIVER WASTEWATER TREATMENT PLANT ELECTRIC POLE REPAIR

2015

INDEX OF SHEETS

CV	COVER SHEET
E1	ELECTRICAL SITE PLAN
CD1	POLE COONSTRUCTION DETAILS AND GENERAL NOTES
PD1	POLE DETAIL SHEET 1
PD2	POLE DETAIL SHEET 2
PD3	POLE DETAIL SHEET 3
PD4	POLE DETAIL SHEET 4
PD5	POLE DETAIL SHEET 5
ML1	MATERIAL LIST
REF	EXISTING PRIMARY ONE LINE

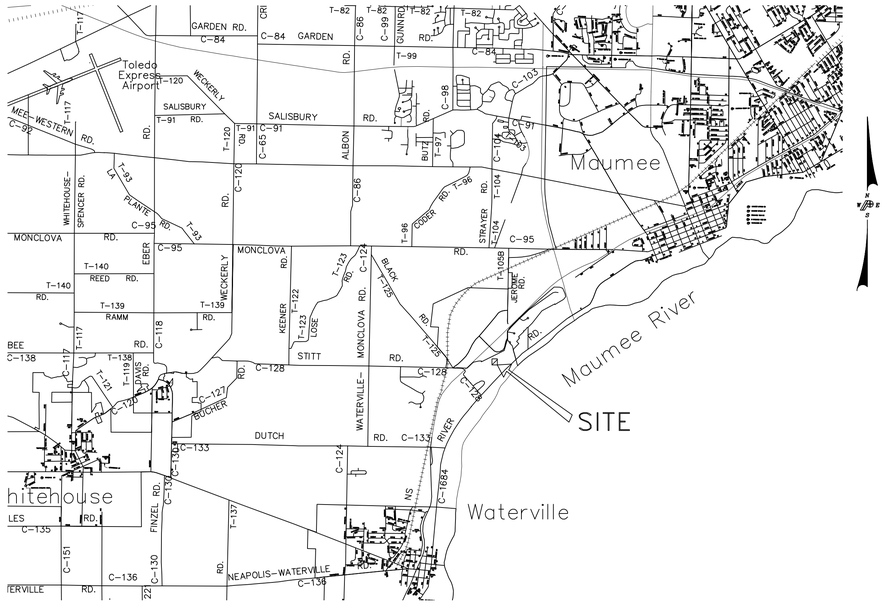

SITE MAP

NOT TO SCALE

POGGEMEYER DESIGN GROUP, INC.
ARCHITECTS • ENGINEERS • PLANNERS
1168 NORTH MAIN STREET (419) 352-7537 BOWLING GREEN, OHIO 43402

SET NO.

ISSUANCE

DATE	DESCRIPTION
03-31-15	ISSUED FOR BID

REVISION

DATE	DESCRIPTION

STATE OF OHIO
DANIEL L. KNOTT
E-45041
REGISTERED PROFESSIONAL ENGINEER

LUCAS COUNTY MAUMEE RIVER WASTEWATER TREATMENT PLANT ELECTRIC POLE REPLACEMENT

PDG NO. 3063-003

FILE: H:\PDG\STANDARD\BORDER\COV2436E.DWG DATE: 2/18/98

ANY INFORMATION OR DATA ON THIS DRAWING IS NOT INTENDED TO BE SUITABLE FOR REUSE BY ANY PERSON, FIRM OR CORPORATION OR ANY OTHERS ON EXTENSIONS OF THE PROJECT OR ON ANY SITE OR PROJECT NOT ORIGINALLY INTENDED WITH WRITTEN VERIFICATION, ADAPTATION BY THE OWNER, ARCHITECT OR SURVEYOR FOR THE SPECIFIC PURPOSE INTENDED WILL BE AT THE USERS SOLE RISK AND WITHOUT LIABILITY OR LEGAL EXPOSURE TO THE ENGINEER, ARCHITECT OR SURVEYOR.

Lucass County
Maumee River Wastewater Treatment Plant
Waterville, Ohio
Power Pole Replacement and Repair
Project No. 3063-003

Pole Construction Detail
3/7/2015

REV	POLE NO	POLE HEIGHT/CLASS	POLE DESCRIPTION	CONSTRUCTION DETAILS	REMARKS
	5	50/3	GOAB Switch Pole	U, F, K1	Replace existing 1-10' cross arm with 600 amp in line GOAB switch type assembly with a new double deadend cross arms and insulators and pre-assembled crossam mounted side break type group operated switch assembly including all hardware, insulators, jumpe
	6	50/3	Lateral Tap Pole	I,J1	Install new primary down guy wire with pole attachment to replace existing. Connect to existing anchor. Reattach and reconnect light.
	7	45/3	Dead End Pole	C1	Replace 2- 8' dead end cross arms, insulators, clamps and hardware.
	10	50/4	Pole with push up pole	B1	Replace the 2- 8' cross arms for the tangent support and insulators including all hardware. The dead end cross arms will not be replaced. Reattach and reconnnect light.
	11	50/2	Tangent Pole with Riser	A1, A1(without insulators but with 3 cutouts and 3 LAs)	Replace 1-8' tangent cross arm and insulators including all hardware . Replace 1-8' cross for riser equipment and replace 3 fused cutouts and 3 lightning arresters and all hardware.
	12	50/3	Tangent Pole with Buck Arm Corner	B1, A(Provide deadend insulator assemblies for the slack span per C1)	Replace 2-8' double tangent cross arms and insulators and 2-8' dead end crossarms and insulators including all hardware.
	13	50/2	Dead End Pole	C, F, K2, I(2), J1 (2)	Replace Pole and 2-8' dead end cross arms and insulators icluding all hardware. Dead end both directions. Replace down guys. Connect down guys to existing anchors. New gound rod and grounding.
	17	50/2	Feeder Riser Pole	A1, A1(without insulators but with 3 cutouts and 3 LAs) (Riser equipment brackets as shown in SR can be provided instead of the cross arm)F, K1	Replace pole, cross arms, insulators and 3 cutouts and 3 LA riser equipment and all hardware. New ground rod and grounding. Reattach and reconnect light.
	21	50/2		V, V (Tap), F, I (2), H(2)	Replace pole, insulators, and all hardware, down guys and anchors. New ground rod and grounding. Reattach light and reconnect.
	26	50/1	Riser pole with three tranformers	A1, F, K1,	Replace pole,cross arms, insulaotrs and all hardware. Remove and re-install 3 transformers. Replace 3 fused cutouts and 3 arrestors. New ground rod and grounding. Reattach and connect light.
	30	50/1	Riser pole with multiple communications risers.	B2, SR (Cross arm can be substituted for brackets), F(2), I, J1(2), K1	Replace pole, 2-8' tangenet cross arms with angle pin insulators assemblies, 2-8' switch arms with one cross arm and replace 200 amp switches with three (3) 200 amp fused cutouts and lightning arresters, down guys attached to existing anchors, grounding
	31	50/2		B1, F, K1, S(for cross arm arrangement)	Replace pole, replace bracket mounted insulators with 2-8' tangent cross arms and insulators,one (1) cross arm with fused cutouts and lightning arresters for transformer and all hardware, ground rod and grounding. Reattach and reconnect transformer.
	32	50/3	Recloser Pole for Blowers	S	Replace 1-8' crossarms including three lightining arresters and fused cutouts, insulators including ridge pin insulators and all hardware. Reconnect transformer.
	35	50/2	GOAB Switch Pole	U, F, K1	Replace pole and existing 1-10' cross arm with 600 amp in line GOAB switch type assembly with new double deadend cross arms and insulators and pre-assembled crossam mounted side break type group operated switch assembly including all hardware, insulator

Lucas County
Maumee River Wastewater Treatment Plant
Waterville, Ohio
Power Pole Replacement and Repair
Project No. 3063-003

General Notes
3/23/2015

NUMBER	GENERAL NOTES
1	The following notes apply to all drawings and poles.
2	Pole detail drawings indicate the general arrangement and materials required for the typical pole construction. Contractor to provide and install all required equipment, materials and installation required for a complete installation. Rebuild poles base
3	Contractor to provide all required equipment and labor for the installation.
4	All phase and neutral insulators and insulator hardware shall be replaced wherever cross arms and/or poles are replaced
5	All cross arm supports and hardware are to be replaces on the poles replaced, or modified.
6	The plant is to remain in continuous operation during the construction. The contractor shall coordinate with the owner all work which requires an outage or which could lead to an unexpected outage. Certain buildings may be permitted to be without power
7	Contractor to provide all required temporary support poles, temporary cross arms, spreader arms, insulating material, temporary jumpers required for the construction and maintaining the plant in continuous operation.
8	Contractor to provide temporary generators, transformers, fuel and connections to be used for back up power should an outage of more than 2 hours be required.
9	Contractor to retension conductors as required to maintain existing sag and NESC clearances.
10	Reconnect all circuit neutral and grounding conductors. Clean contact surfaces before reconnection.
11	Replace all preform conductor grips on poles worked on.
12	Reattach all lights, communications, secondary, neutrals at pole replacements. Provide new hardware required for the reattachments. Reconnect lights and verify operation. Replace lamps of each fixture.
13	Poles replacements with risers are to be set as near their original position as possible. Contractor to relocated risers and cables as required without additional costs unless owner pre-approves additional costs.
14	Insulator include the complete assembly including pins, clamps, hardware and conductor preformed grips.
15	Replace ridge pin insulator assemblies where cross arm insulators are replaced.
16	Contractor to determine phase and neutral conductor type and size and provide the appropriate type and size clamps and materials for the application. Material manufacturers are indicated in the material list.

POGGEMEYER DESIGN GROUP, INC.
ARCHITECTS • ENGINEERS • PLANNERS
1168 NORTH MAIN STREET • (419) 352-7537 • BOWLING GREEN, OHIO 43402

LUCAS COUNTY MAUMEE RIVER WASTEWATER TREATMENT PLANT ELECTRIC POLE REPAIR

POLE CONSTRUCTION DETAILS AND GENERAL NOTES

DRAWN BY	CHECKED BY
G.N.C.	D.L.K.

REVISION
03/31/2015
ISSUED FOR BID

CD1 OF

JOB NUMBER
3063-003

FILE No. I:\3063\003\MATERIAL-LIST.dwg 03/30/15 13:40-chippsg

FILE No. I:\3063\003\SITE.dwg 03/30/15 13:34-chippsg

ANY INFORMATION OR DATA ON THIS DRAWING IS NOT INTENDED TO BE SUITABLE FOR REUSE BY ANY PERSON, FIRM OR CORPORATION OR ANY OTHERS ON EXTENSIONS OF THIS PROJECT OR FOR ANY USE ON ANY OTHER PROJECT. ANY REUSE WITHOUT WRITTEN VERIFICATION AND ADAPTATION BY THE ENGINEER, ARCHITECT OR SURVEYOR FOR THE SPECIFIC PURPOSE INTENDED WILL BE AT THE USERS SOLE RISK AND WITHOUT LIABILITY OR LEGAL EXPOSURE TO THE ENGINEER, ARCHITECT OR SURVEYOR.

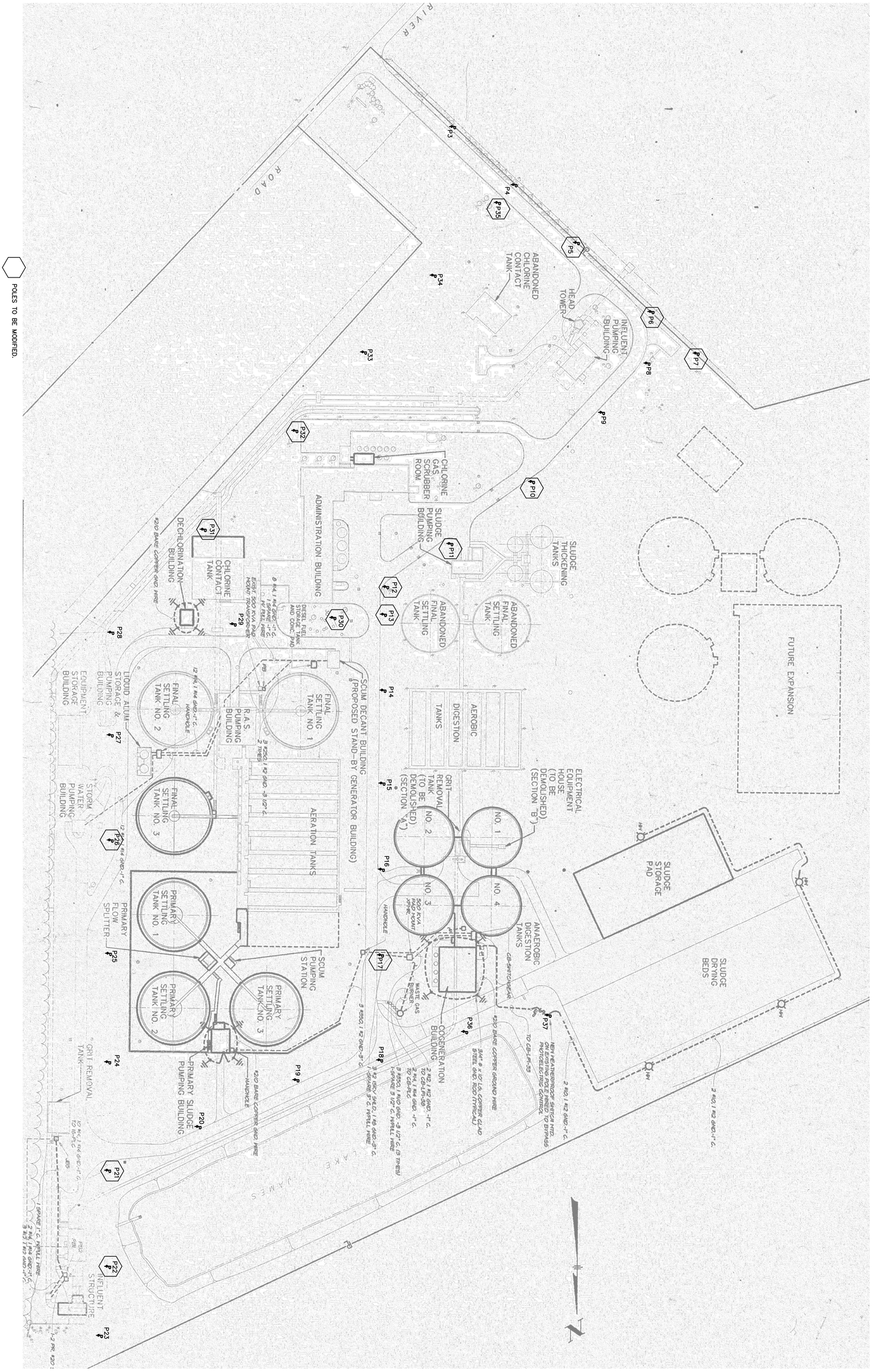

JOB NUMBER 3063-003	E1 OF	REVISION 03/31/2015 ISSUED FOR BID	DRAWN BY G.N.C. CHECKED BY D.L.K.	**ELECTRICAL SITE PLAN**	**LUCAS COUNTY MAAUMEE RIVER WASTEWATER TREATMENT PLANT ELECTRIC POLE REPAIR**

POGGEMEYER DESIGN GROUP, INC.
ARCHITECTS • ENGINEERS • PLANNERS
1168 NORTH MAIN STREET (419) 352-7537 BOWLING GREEN, OHIO 43402

ANY INFORMATION OR DATA ON THIS DRAWING IS NOT INTENDED TO BE SUITABLE FOR REUSE BY ANY PERSON, FIRM OR CORPORATION OR ANY OTHERS ON EXTENSIONS OF THE PROJECT FOR WHICH IT WAS PREPARED, WITHOUT THE EXPRESS WRITTEN AUTHORITY OF THE OWNER, ARCHITECT OR SURVEYOR. ANY REUSE FOR OTHER PROJECTS OR FOR THE SPECIFIC PURPOSE INTENDED WILL BE AT THE USERS SOLE RISK AND WITHOUT LIABILITY OR LEGAL EXPOSURE TO THE ENGINEER, ARCHITECT OR SURVEYOR.

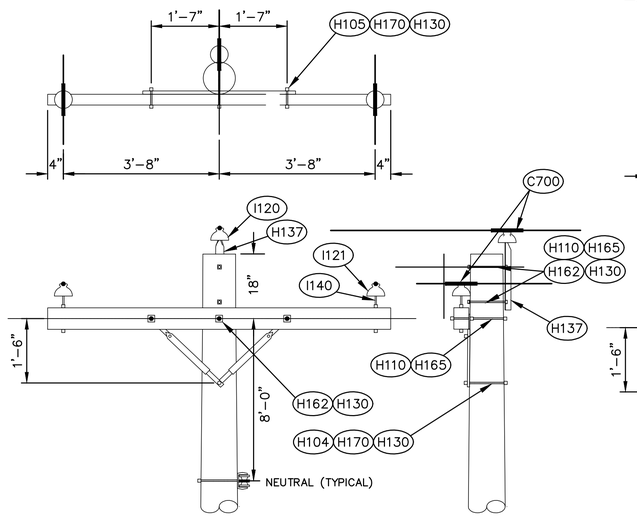

DETAIL A1
12.47KV SINGLE ARM TANGENT
RIDGE PIN

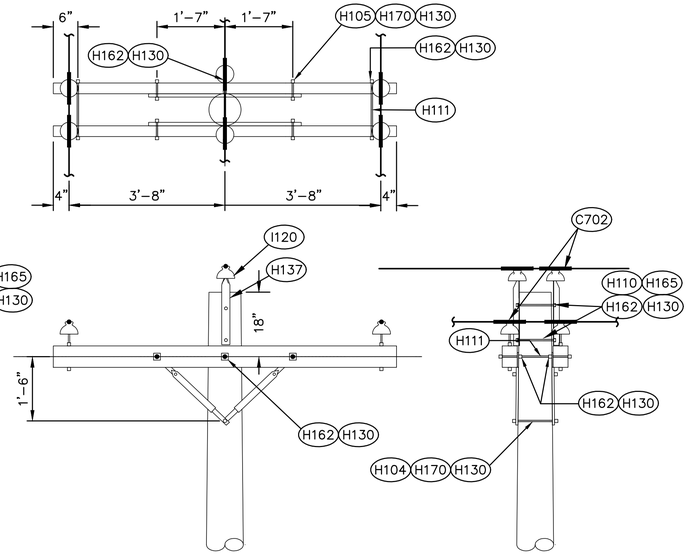

DETAIL B1
12.47KV DOUBLE ARM TANGENT
RIDGE PIN

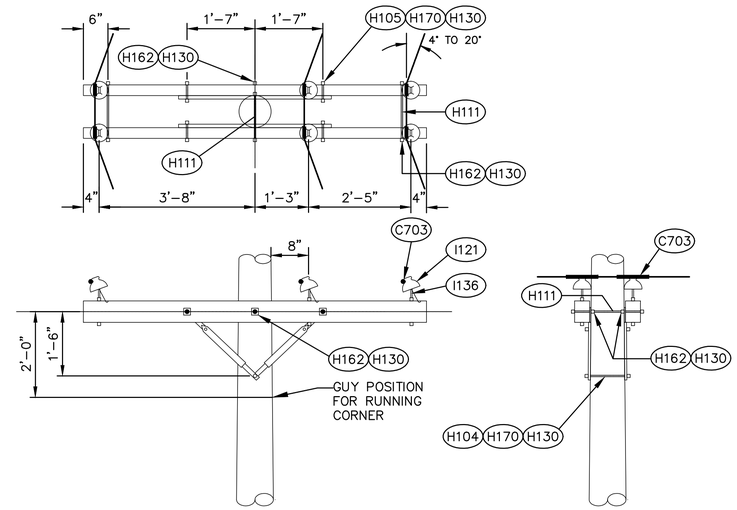

DETAIL B2
12.47KV DOUBLE ARM TANGENT
WITH ANGLE BRACKETS
(RUNNING CORNERS UP TO 10 DEGREES)

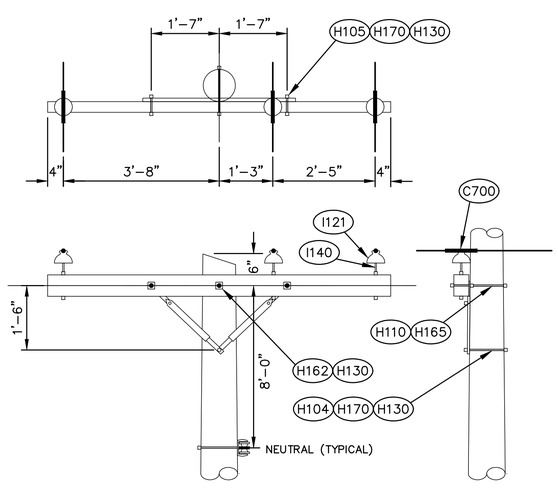

DETAIL A
12.47KV SINGLE ARM TANGENT

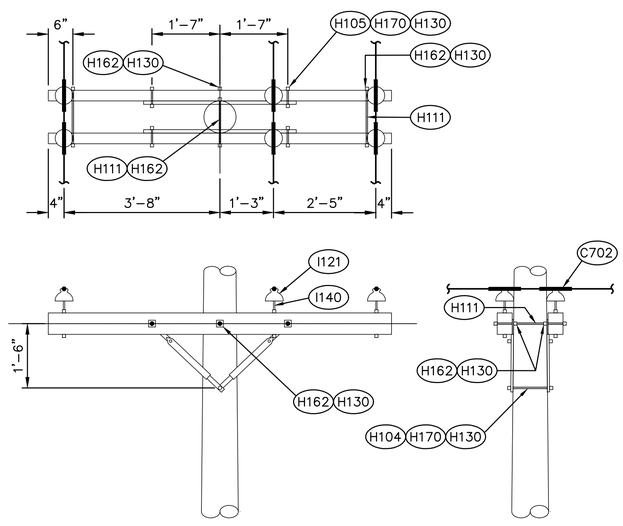

DETAIL B
12.47KV DOUBLE ARM TANGENT

POGGEMEYER DESIGN GROUP, INC.
ARCHITECTS • ENGINEERS • PLANNERS
1168 NORTH MAIN STREET • (419) 352-7537 • BOWLING GREEN, OHIO 43402

LUCAS COUNTY MAUMEE RIVER
WASTEWATER TREATMENT PLANT
ELECTRIC POLE REPAIR

POLE DETAIL
SHEET 1

DRAWN BY	CHECKED BY
G.N.C.	D.L.K.

REVISION
03/31/2015
ISSUED FOR BID

PD1
OF

JOB NUMBER
3063-003

FILE No. I:\3063\003\POLE-DETAILS.dwg 03/30/15 13:35-chippsg

ANY INFORMATION OR DATA ON THIS DRAWING IS NOT INTENDED TO BE SUITABLE FOR REUSE BY ANY PERSON, FIRM OR CORPORATION OR ANY OTHERS ON EXTENSIONS OF THE PROJECT OR ON ANY OTHER PROJECT WHEREVER LOCATED, WITHOUT WRITTEN VERIFICATION AND ADAPTATION BY THE PERSON, ARCHITECT OR SURVEYOR FOR THE SPECIFIC PURPOSE INTENDED WILL BE AT THE USERS SOLE RISK AND WITHOUT LIABILITY OR LEGAL EXPOSURE TO THE ENGINEER, ARCHITECT OR SURVEYOR.

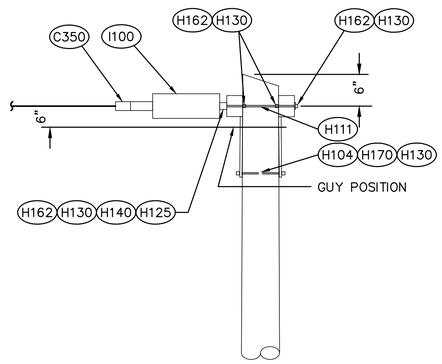

DETAIL C1
12.47KV DEAD END
FULL TENSION

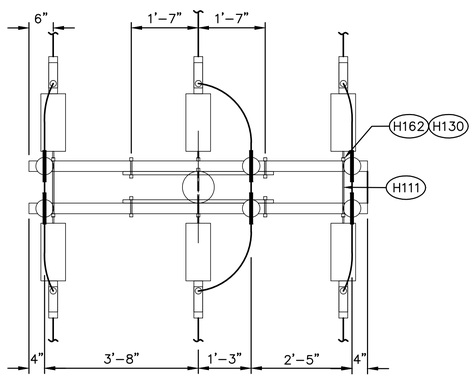

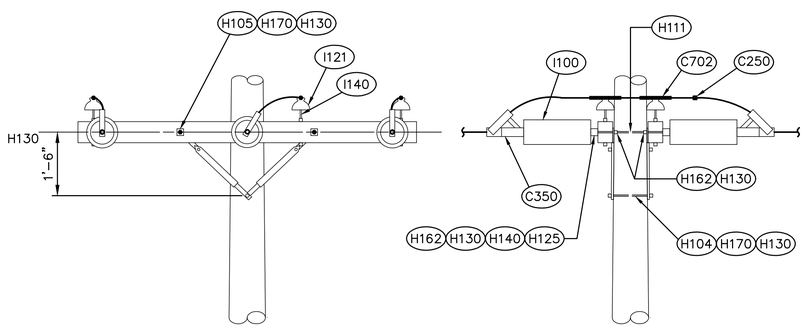

DETAIL C
12.47KV DOUBLE DEAD END – FULL TENSION

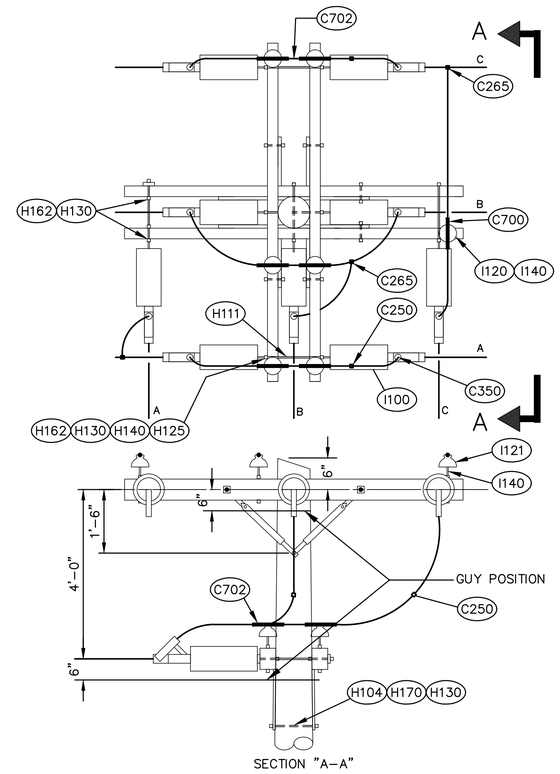

DETAIL D
12.47KV BUCK ARM ANGLE CORNER
(SET BUCK ARM AT REQUIRED ANGLE)

POGGEMEYER DESIGN GROUP, INC.
ARCHITECTS • ENGINEERS • PLANNERS
1168 NORTH MAIN STREET • (419) 352-7537 • BOWLING GREEN, OHIO 43402

LUCAS COUNTY MAUMEE RIVER
WASTEWATER TREATMENT PLANT
ELECTRIC POLE REPAIR

POLE DETAIL
SHEET 2

DRAWN BY	CHECKED BY
G.N.C.	D.L.K.

REVISION
03/31/2015
ISSUED FOR BID

PD2
OF

JOB NUMBER
3063-003

FILE No. I:\3063\003\POLE-DETAILS.dwg 03/30/15 13:36-chippsg

ANY INFORMATION OR DATA ON THIS DRAWING IS NOT INTENDED TO BE SUITABLE FOR REUSE BY ANY PERSON, FIRM OR CORPORATION OR ANY OTHERS ON EXTENSIONS OF THE PROJECT FOR ANY USES OTHER THAN THE SPECIFIC PROJECT FOR WHICH IT WAS PREPARED WITHOUT THE EXPRESS WRITTEN AUTHORITY OF THE OWNER, ARCHITECT OR SURVEYOR. ANY SUCH REUSE, OR ANY REUSE FOR THE SPECIFIC PURPOSE INTENDED WILL BE AT THE USERS SOLE RISK AND WITHOUT LIABILITY OR LEGAL EXPOSURE TO THE ENGINEER, ARCHITECT OR SURVEYOR.

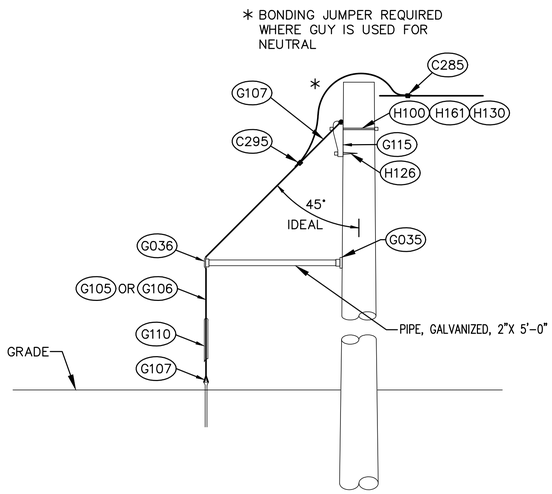

DETAIL M
3/8" OR 7/16" EHS STEEL SIDWALK GUY

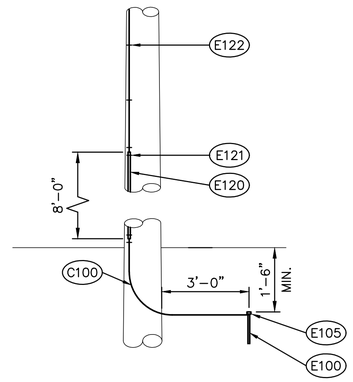

DETAIL F
POLE GROUND DETAIL

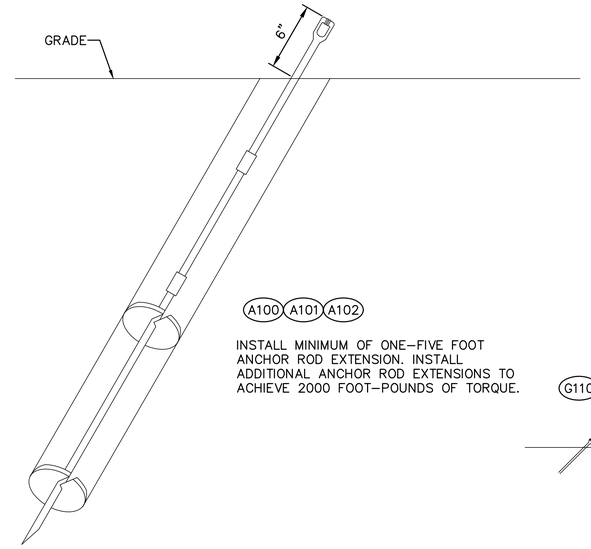

DETAIL H
SCREW ANCHOR

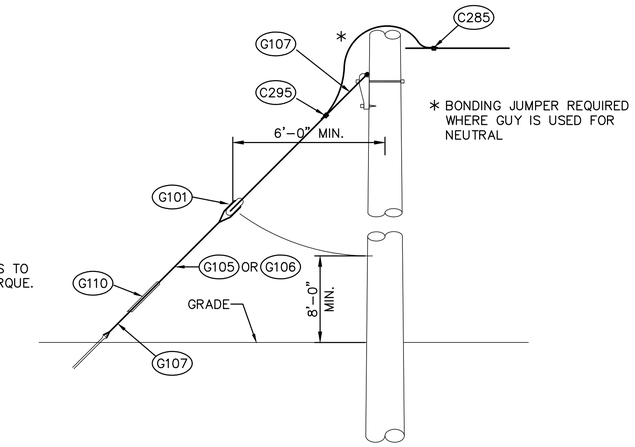

DETAIL I
3/8" OR 7/16" EHS STEEL DOWN GUY

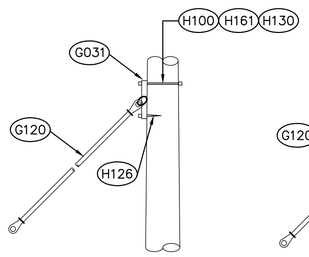

POLE PLATE WITH FIBER GLASS STRAIN
J1

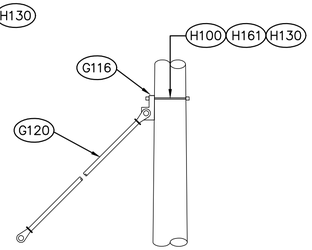

POLE EYE WITH FIBER GLASS STRAIN
J2

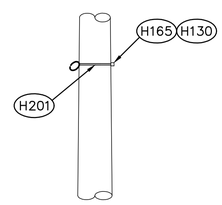

ANGLE THIMBLEYE AND STRAND EYE
J3

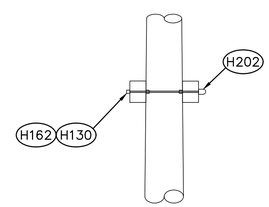

THIMBLEYE ARM GUY
J4

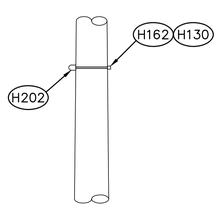

THIMBLEYE POLE GUY
J5

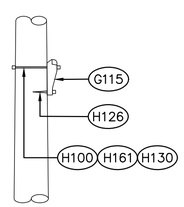

GUY HOOK
J6

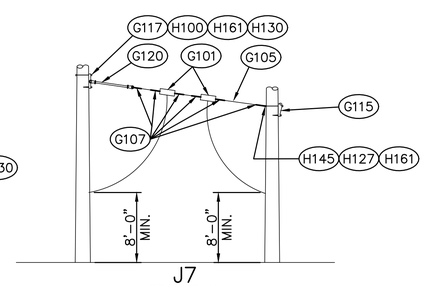

J7
SPAN GUY

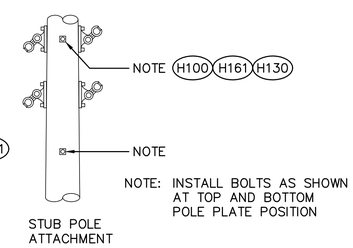

NOTE: INSTALL BOLTS AS SHOWN AT TOP AND BOTTOM POLE PLATE POSITION

STUB POLE ATTACHMENT
J8

DETAIL J
GUY ATTACHMENT DETAILS

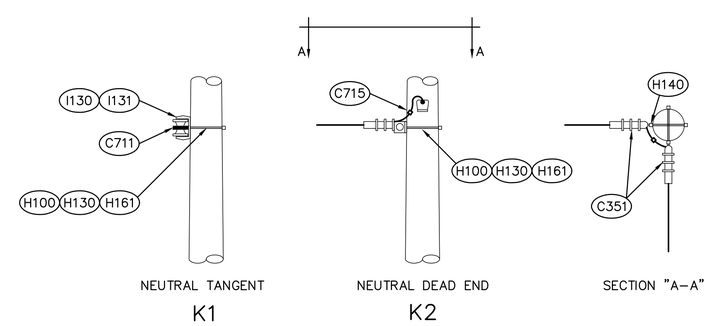

NEUTRAL TANGENT
K1

NEUTRAL DEAD END
K2

SECTION "A-A"

DETAIL K
NEUTRAL SUPPORT DETAILS

POGGEMEYER DESIGN GROUP, INC.
ARCHITECTS • ENGINEERS • PLANNERS
1168 NORTH MAIN STREET • (419) 352-7537 • BOWLING GREEN, OHIO 43402

LUCAS COUNTY MAUMEE RIVER WASTEWATER TREATMENT PLANT
ELECTRIC POLE REPAIR

POLE DETAIL
SHEET 3

DRAWN BY	CHECKED BY
G.N.C.	D.L.K.

REVISION
03/31/2015
ISSUED FOR BID

PD3
OF

JOB NUMBER
3063-003

FILE No. I:\3063\003\POLE-DETAILS.dwg 03/30/15 13:36-chippsg

ANY INFORMATION OR DATA ON THIS DRAWING IS NOT INTENDED TO BE SUITABLE FOR REUSE BY ANY PERSON, FIRM OR CORPORATION OR ANY OTHERS ON EXTENSIONS OF THIS PROJECT OR FOR ANY USE ON ANY OTHER PROJECT. ANY REUSE WITHOUT WRITTEN VERIFICATION AND ADAPTATION BY THE ENGINEER, ARCHITECT OR SURVEYOR FOR THE SPECIFIC PURPOSE INTENDED WILL BE AT THE USERS SOLE RISK AND WITHOUT LIABILITY OR LEGAL EXPOSURE TO THE ENGINEER, ARCHITECT OR SURVEYOR.

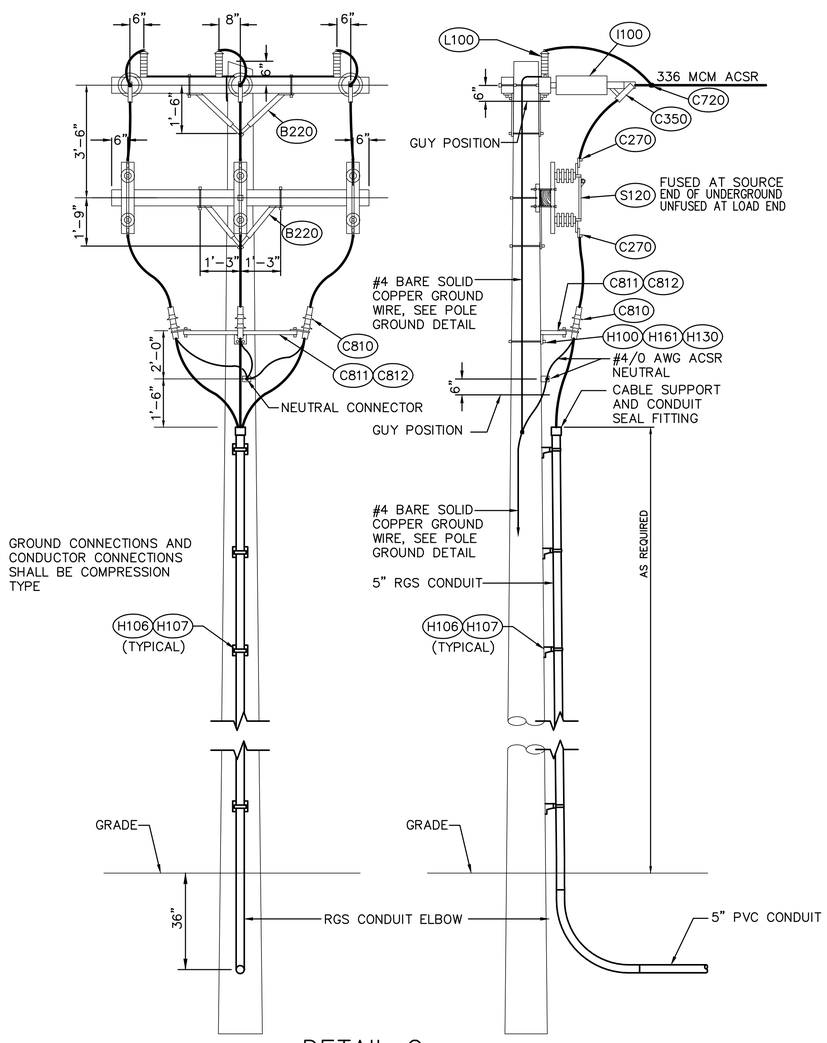

DETAIL G

15KV RISER POLE DETAIL

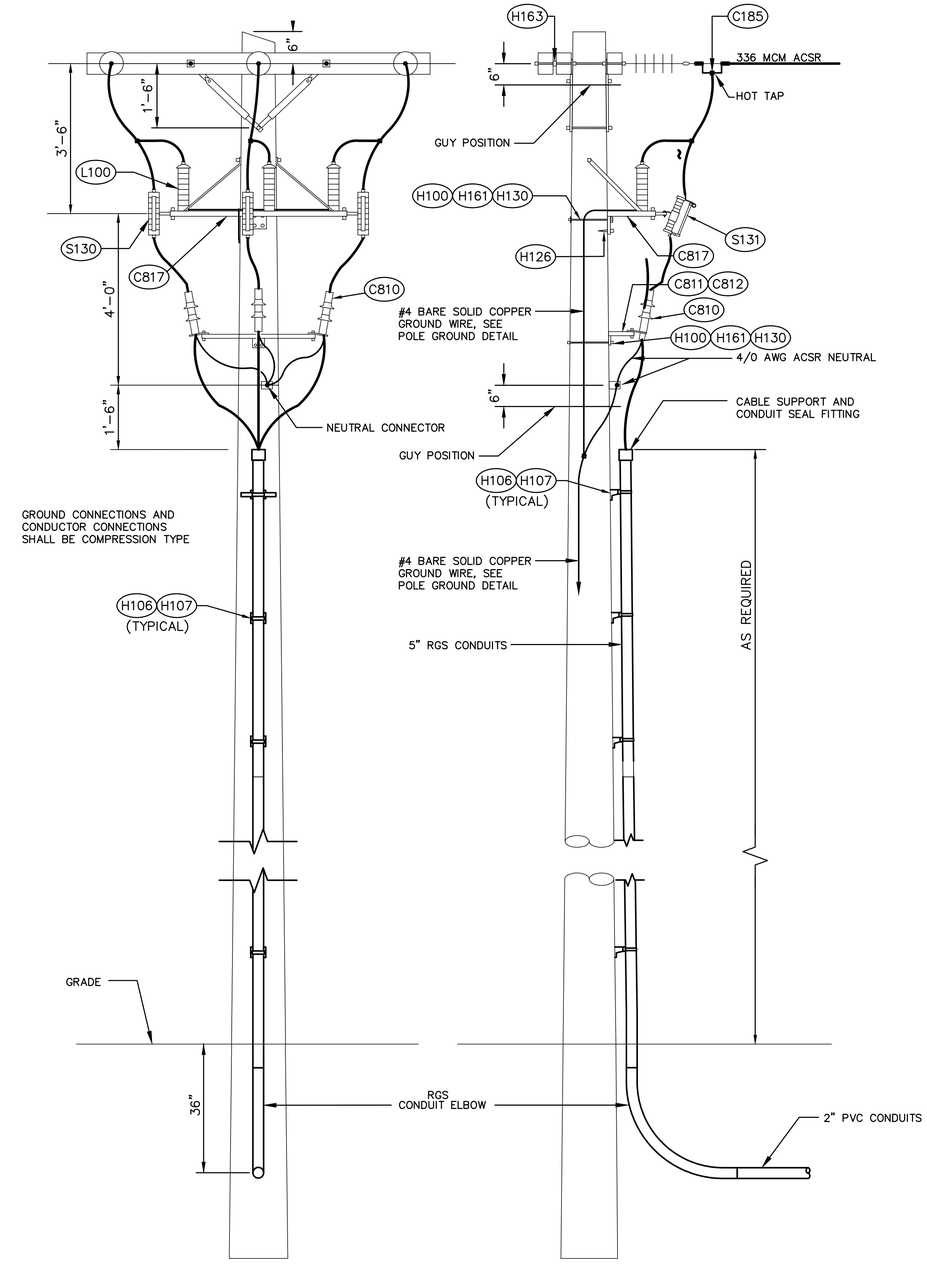

DETAIL SR

15KV SERVICE RISER POLE DETAIL

FILE No. I:\3063\003\POLE-DETAILS.dwg 03/30/15 13:37-chippsg

POGGEMEYER DESIGN GROUP, INC.
ARCHITECTS • ENGINEERS • PLANNERS
1168 NORTH MAIN STREET • (419) 352-7537 • BOWLING GREEN, OHIO 43402

LUCAS COUNTY MAUMEE RIVER WASTEWATER TREATMENT PLANT ELECTRIC POLE REPAIR

POLE DETAIL SHEET 4

DRAWN BY	CHECKED BY
G.N.C.	D.L.K.

REVISION
03/31/2015
ISSUED FOR BID

PD4
OF

JOB NUMBER
3063-003

ANY INFORMATION OR DATA ON THIS DRAWING IS NOT INTENDED TO BE SUITABLE FOR REUSE BY ANY PERSON, FIRM OR CORPORATION OR ANY OTHERS ON EXTENSIONS OF THE PROJECT FOR ANY USES ON ANY PROJECTS WITHOUT WRITTEN AUTHORIZATION AND ADAPTATION BY THE OWNER, ARCHITECT OR SURVEYOR FOR THE SPECIFIC PURPOSE INTENDED WILL BE AT THE USERS SOLE RISK AND WITHOUT LIABILITY OR LEGAL EXPOSURE TO THE ENGINEER, ARCHITECT OR SURVEYOR.

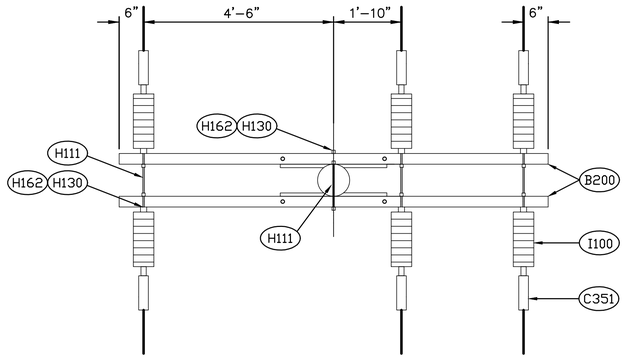

TOP VIEW

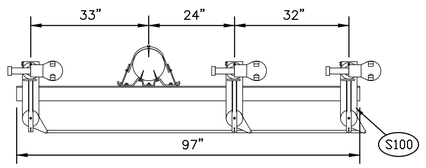

VIEW A–A

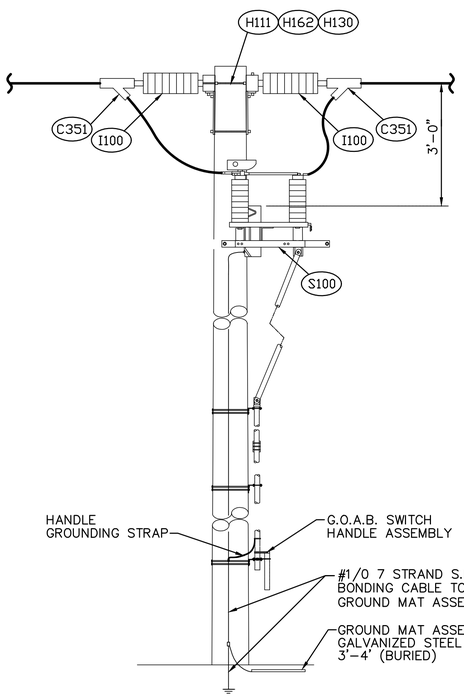

SIDE VIEW

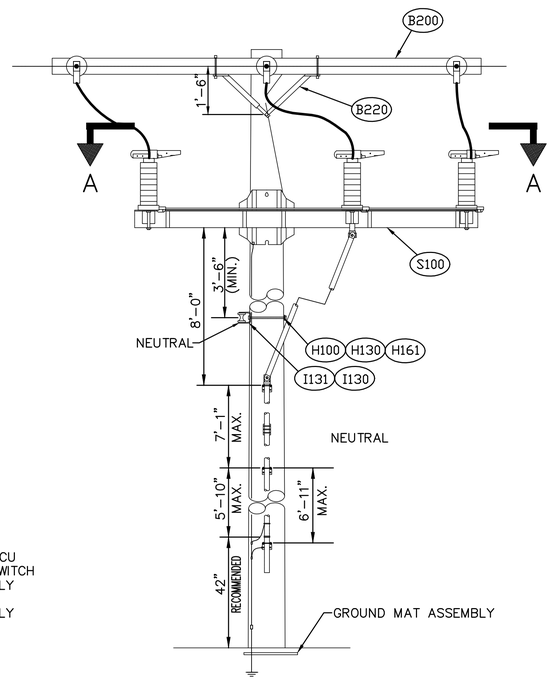

ELEVATION

DETAIL U
THREE PHASE 600A
GANG OPERATED AIR–BREAK SW.
(PER FE STANDARD 12–250)

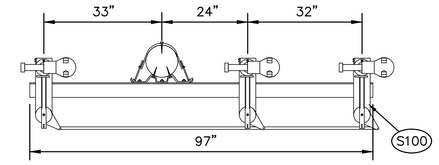

TOP VIEW

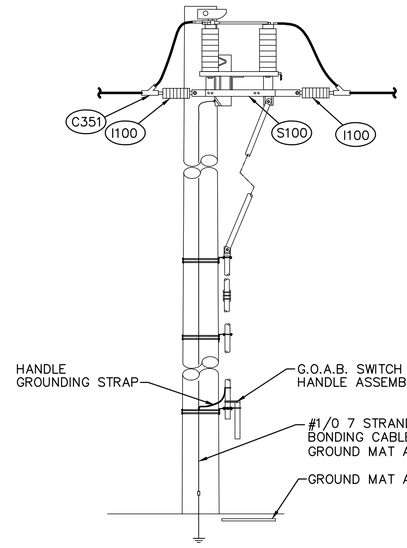

SIDE VIEW

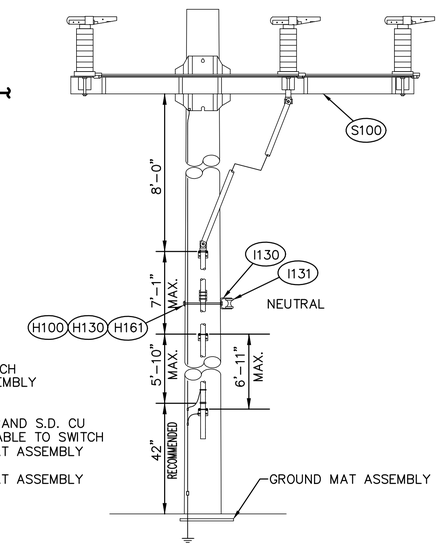

ELEVATION

DETAIL U1
THREE PHASE 600A
GANG OPERATED AIR–BREAK SW.

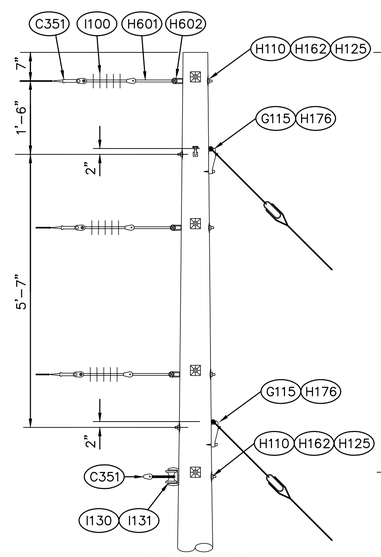

SIDE VIEW

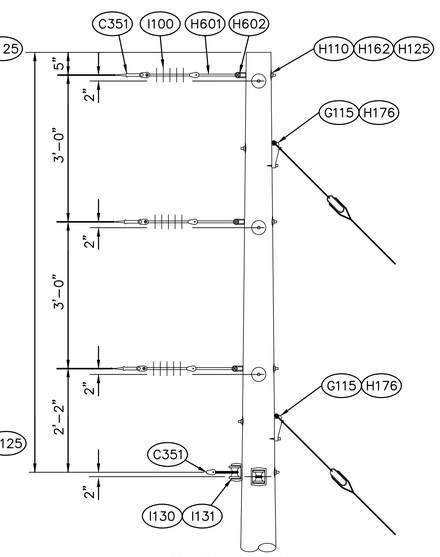

ELEVATION

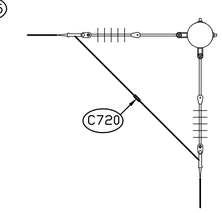

TOP VIEW

DETAIL V
THREE PHASE 600A
VERTICAL CORNER

POGGEMEYER DESIGN GROUP, INC.
PLANNERS
ENGINEERS • BOWLING GREEN, OHIO 43402
ARCHITECTS • (419) 352-7537
1168 NORTH MAIN STREET

LUCAS COUNTY MAUMEE RIVER
WASTEWATER TREATMENT PLANT
ELECTRIC POLE REPAIR

POLE DETAIL
SHEET 5

DRAWN BY	CHECKED BY
G.N.C.	D.L.K.

REVISION
03/31/2015
ISSUED FOR BID

PD5
OF

JOB NUMBER
3063–003

FILE No. I:\3063\003\POLE-DETAILS.dwg 03/30/15 13:38-chippsg

ANY INFORMATION OR DATA ON THIS DRAWING IS NOT INTENDED TO BE SUITABLE FOR REUSE BY ANY PERSON, FIRM OR CORPORATION OR ANY OTHERS ON EXTENSIONS OF THE PROJECT OR ON ANY OTHER PROJECT WITHOUT WRITTEN AUTHORIZATION AND ADAPTATION BY THE OWNER, ARCHITECT OR SURVEYOR FOR THE SPECIFIC PURPOSE INTENDED WILL BE AT THE USERS SOLE RISK AND WITHOUT LIABILITY OR LEGAL EXPOSURE TO THE ENGINEER, ARCHITECT OR SURVEYOR.

LUCAS COUNTY
MATERIAL LIST FOR
MAUMEE RIVER WWTP POLE REPLACEMENT &REPAIR
PROJECT NO. 3063-003
March 24, 2015

3/24/15

REV.	ITEM	DESCRIPTION	EQUIVALENT TO: MFG.	TYPE
	A - ANCHORING EQUIPMENT			
	A100	ANCHOR SCREW TYPE - POWER INSTALLED - 8" AND 10" WITH ANCHOR ROD SECTION (20,000 LBS.)	AB CHANCE	C102-5002
	A101	ANCHOR ROD EXTENSION WITH COUPLING, 5' LONG	AB CHANCE	12656
	A102	ANCHOR ROD WITH TRIPLE EYE ASSEMBLY	AB CHANCE	C-102-00025
	B - CROSS ARMS AND BRACES			
	B100	FIR CROSS ARM, 3-5/8" X 4-5/8" X 8'-0" LONG, SIX PIN, PENTACHLOROPHENOL TREATED		
	B120	BRACE FOR WOOD CROSSARM, UNDERARM, REVERSIBLE, 48" SPACING, 18" DROP.	ALUMA-FORM	RA-4818
	B122	BRACE FOR WOOD CROSSARM UNDER ARM, WOOD, 72" SPAN, 24" DROP	MACLEAN POWER SYSTEMS	JA4772R
	B200	FIR CROSS ARM, 3-5/8" X 4-5/8" X 10'-0" LONG, SIX PIN, PENTACHLOROPHENOL TREATED		
	B220	BRACE FOR 10' WOOD CROSSARM, UNDERARM, REVERSIBLE, 48" SPACING, 24" DROP.	ALUMA-FORM	RA-4824
	B300	ALLEY ARM BRACE, 7'-0" LONG	MACLEAN POWER SYSTEMS	J1525
	C - CONDUCTORS			
	-	NO. 336.4 MCM ACSR 18/1 MERLIN CONDUCTOR WITH STANDARD WEIGHT ZINC COATED CORE		
	-	NO. 4/0 AWG ACSR 6/1 PENQUIN CONDUCTOR WITH STANDARD WEIGHT ZINC COATED CORE.		
	C100	CONDUCTOR, GROUNDING, NO. 4 BARE SOFT DRAWN SOLID COPPER		
	C101	CONDUCTOR, EQUIPMENT CONNECTIONS, NO. 4 BARE SOFT DRAWIN COPPER		
	C180	SPLIT BOLT CONNECTION	BLACKBURN	
	C185	STIRRUP & HOT LINE CLAMP	ANDERSON	VCLS-9-022
	C250	SLEEVE, COMPRESSION, JUMPER SPLICING, 336.4 MCM ACSR, 18/1	BURNDY	YCS 3215
	C251	SLEEVE COMPRESSION JUMPER SPLICE, #4/0 ACSR 6/1	BURNDY	YCS
	C265	TAP - COMPRESSION TEE	ANDERSON	VACT
	C268	ARMOR GRIP SUPPORT 336.4 MCM ACSR FOR ANGLE CLAMPS	PREFORMED LINE PRODUCTS	
	C270	CONNECTOR, COMPRESSION, 2 HOLE SPADE WITH NUTS & BOLTS FOR 336.4 MCM ACSR	ANDERSON	VCTL
	C285	CONNECTOR COMPRESSION NO. 4 COPPER TO NO. 4/0 ACSR	KEARNEY	503
	C295	CONNECTOR, BOLTED, NO. 4 COPPER TO 3/8" STEEL	ANDERSON	ST
	C296	CONNECTOR - BOLTED - NO. 4 COPPER TO 7/16" STEEL	ANDERSON	ST
	C351	CLAMP, STRAIGHT LINE, SPRING LOADED	ANDERSON	ADEZ
	C700	336.4 MCM ACSR TANGENT WIRE TIE #4 SOL COPPER BASRE, #4 SOL ALUM BARE	PREFORMED LINE PRODUCTS	UTF
	C701	#4/0 ACSR NEUTRAL WIRE TIE	PREFORMED LINE PRODUCTS	EZSP
	C702	#336.4 MCM ACSR DOUBLE ARM SUPPORT TIE	PREFORMED LINE PRODUCTS	DST
	C703	336.4 MCM ACSR DOUBLE ARM ANGLE TIE	PREFORMED LINE PRODUCTS	DBST
	C704	336.4 MCM ACSR FULL TENSION AUTOMATIC SPLICE	FARGO	GL
	C710	#2 ACSR TANGENT TIE WIRE	PREFORMED LINE PRODUCTS	UTF-1204
	C711	#2 ACSR NEUTRAL TIE WIRE	PREFORMED LINE PRODUCTS	EZSP-4374
	C712	#2 ACSR DOUBLE ARM SUPPORT TIE	PREFORMED LINE PRODUCTS	DST-0152
	C713	#2 ACSR DOUBLE ARM AMGLE TIE	PREFORMED LINE PRODUCTS	DBST-1102
	C714	#2 ACSR FULL TENSION AUTOMATIC SPLICE	FARGO	GL-404
	C715	#2 ACSR JUMPER SLEEVE COMPRESSION	BLACKBURN	TR-64
	C720	COMPRESSION CONNECTORS	BLACKBURN	WR SERIES
	C730	MECHANICAL CONNECTORS	BLACKBURN	HPS SERIES
	C800	PRIMARY UNDERGROUND CABLE, 15 KV, 220 MIL, 133% INSULATION, STRAND FILLED, FULL CONCENTRIC NEUTRAL, WITH JACKET (ALUMINUM OR COPPER CONDUCTORS AS SHOWN ON THE DRAWINGS)	OKOGUARD	URO-J
	C801	3 PHASE 300 AMP LOAD BREAK CENTER (12 POSITION TERMINAL ENCLOSURE)	MAYSTEEL	CW360-16TH
	C802	3 PHASE LOAD BREAK CENTER GROUND SLEEVE	MAYSTEEL	CW360-GS-18 18-FG
	C805	3 PHASE 600 AMP LOAD BREAK CENTER (12 POSITION TERMINAL ENCLOSURE)	NORDIC	
	C806	3 PHASE LOAD BREAK CENTER GROUND SLEEVE	NORDIC	
	C809	BRACKET FOR 1 PHASE CUTOUTS,ARRESTORS, INSULATORS	CHANCE	1SBM18CLH
	C810	15 KV CABLE TERMINATIONS TERMINATIONS WITH LUG, MOUNTING BRACKET	ELASTIMOLD	PCT
	C811	3 PHASE MOUNTING BRACKET	ALUMAFORM	WT3CA-48
	C812	TERMINATION MOUNTING BRACKET	ELASTIMOLD	35MTB
	C813	200 AMP LOAD BREAK AND 600 AMP DEAD BREAK ELBOW CONNECTORS	ELASTIMOLD	
	C814	DUST COVERS	ELASTIMOLD	
	C815	ELBOW ARRESTORS	ELASTIMOLD	
	C817	3 PHASE MOUNTING BRACKET FOR CUTOUTS, AND ARRESTERS	ALUMA-FORM	R3CA-48
	C820	FAULT LOCATORS	SEL	
	E- GROUNDING MATERIAL			
	E100	GROUND ROD, COPPERWELD, SECTIONAL 5/8" X 8'-0"		
	E105	CLAMP, GROUND ROD	JOSLYN	J8392
	E106	COUPLING, GROUND ROD	JOSLYN	J9182
	E120	WOOD MOLDING, GROUND WIRE COVER, 3/4" X 8'-0" TREATED	ELECTRIC MATERIALS COMPANY	D2.62.187HD
	E121	STAPLE, COPPERWELD FOR MOLDING	JOSLYN	
	E122	STAPLE, COPPER COATED FOR NO. 4 BARE GROUND WIRE	JOSLYN	
	E127	BRACKET, DOWNLEAD, FIBERGLASS	CONTINENTAL ELECTRIC	DLBA-18
	G - GUYING MATERIALS			
	G031	POLE EYE PLATE, MAX CLEVIS PIN-7/8", GUYING ANGLE 10-90 DEGREES	MACLEAN POWER SYSTEMS	EPF-88-7
	G035	FLANGE, POLE, SIDEWALK GUY	ALLIED BOLT	1436
	G036	END FITTING CLAMP FOR SIDEWALK GUY	ALLIED BOLT	1437
	G101	INSULATOR, GUY STRAIN, PORCELAIN	JOSLYN	L506
	G105	3/8" EHS GALVANIZED STEEL GUY STRAND		
	G106	7/16" EHS GALVANIZED STEEL GUY STRAND		
	G107	PREFORMED GUY GRIP SIZED AS REQUIRED	PREFORMED LINE PRODUCTS	
	G110	GUY MARKER, YELLOW PLASTIC, 8'-0"	JOSLYN	J1493Y
	G115	GUY HOOK - 3/4" BOLT	JOSLYN	P152A
	G116	GUY. POLE EYE, 3/4" BOLT	JOSLYN	J2575
	G117	GUY, POLE EYE PLATE, 3/4" BOLT, LAG SCREW	JOSLYN	PX88
	G120	FIBER GLASS DOWN LEAD, 60", CLEVIS-CLEVIS WITH ROLLER	CHANCE	GS16060
	H - HARDWARE			
	H100	BOLT, MACHINE 3/4" X LENGTH AS REQUIRED	JOSLYN	J89
	H101	BOLT, MACHINE 7/8" X LENGTH AS REQUIRED	JOSLYN	J90
	H102	BOLT, DOUBLE ARMING 3/4"X LENGTH AS REQUIRED WITH 4 SQUARE NUTS	JOSLYN	J888
	H103	EYE NUT, OVAL 3/4"	JOSLYN	J1093
	H104	BOLT, MACHINE 1/2" X LENGTH AS REQUIRED		
	H105	BOLT, MACHINE 3/8" X LENGTH AS REQUIRED		
	H106	CONDUIT STANDOFF BRACKETS LENGTH AS REQUIRED	ALUMA-FORM	6-CSO
	H107	CONDUIT SUPPORT STRAPS SIZED AS REQUIRED	ALUMA-FORM	STK-**
	H110	BOLT, MACHINE 5/8" X LENGTH AS REQUIRED	JOSLYN	
	H111	BOLT, DOUBLE ARMING, 5/8" WITH 4 SQUARE NUTS (LENGTHS AS REQURIED)	JOSLYN	
	HI25	SQUARE NUT (SIZED FOR BOLT)		
	H126	LAG SCREW 5/8"X5"	JOSLYN	J8765
	H127	LAG SCREW 1/2"X4"	JOSLYN	J8754
	H130	M.F. LOCKNUT (SIZE FOR BOLT)	JOSLYN	858
	H132	BOLT, SHOULDER EYE, 3/4"X LENGTH REQUIRED	JOSLYN	J953
	H140	EYENUT - 5/8"	CHANCE	6502
	H145	THIMBLEYE NUT - 3/4"	JOSLYN	J6511
	H146	BOLT EYE, EXTRA LONG EYELET - 5/8" WITH SUARE NUT	JOSLYN	J142
	H161	WASHER, SQUARE CURVED - 3" X 3" X 1/4", (3/4" BOLT DIA.)	CHANCE	6823
	HI62	WASHER, SQUARE - 2-1/4" X 2-1/4" X 3/16" (5/8" BOLT DIA.)	CHANCE	6822
	H163	WASHER, SQUARE - 4" X 4" X 1/4" (7/8" BOLT DIA.)	CHANCE	6819
	H164	WASHER, SQUARE CURVED - 3 1/4" X 3 1/4" X 1/4", (3/4" BOLT DIA.)	CHANCE	6825
	H165	WASHER SQUARE CURVED - 3X3X1/4 (5/8" BOLT DIAMETER	CHANCE	
	H170	WASHER, ROUND (SIZE AS REQUIRED)		
	H176	EYELET, THIMBLE, 3/4" BOLT	MIF (FLAGG)	P126A
	H200	WASHER, SQUARE CURVED, 3"X4", 7/16", MAX BOLT DIAMETER 7/8"	MIF (FLAGG)	P120
	H201	THIMBLEYE, ANGLE, 5/8" BOLT	JOSLYN	J815_
	H202	THIMBLEYE, STRAIGHT, 5/8" BOLT	JOSLYN	J805_
	H203	THIMBLEYE, STRAIGHT, 3/4" BOLT	CHANCE	561_ (LENGTH AS REQUIRED)
	H310	CUTOUT, LIGHTNING ARRESTER AND TERMINATOR BRACKET	ALUMA-FORM	R3CA -48
	H500	SUSPENSION BOLTED ANGLE CLAMP ALUMINUM	ANDERSON	AAC-104-90-N
	H501	EXTENSION	CHANCE	C207-0112
	H550	TWO HOLE COMPRESSION CONNECTOR SIZED PER CONDUCTOR	BLACKBURN	TYPE ATL
	H602	DEAD END CLECIS	CHANCE	456
	I - INSULATORS AND PINS			
	I100	INSULATOR - 15 KV SUSPENSION TYPE - POLYMER	OHIO BRASS	PD1-15
	I121	INSULATOR, PIN TYPE, F-NECK CLASS 55-4 - 15KV	PPC	366S
	I130	SPOOL INSULATOR	JOSLYN	J151
	I131	INSULATOR CLEVIS	JOSLYN	J250
	I135	BRACKET OFFSET NEUTRAL		
	I136	CROSS ARM ANGLE PINS	CHANCE	DP4F1
	I137	INSULATOR PIN, POLE TOP, 18", HOT DIPPED GALV.	CHANCE	2170
	I140	INSULATOR PIN WITH WASHER AND LOCKNUT (AS REQUIRED FOR THE INSULATOR MOUNTING)	CHANCE	883P
	L - SURGE ARRESTERS			
	L100	SURGE ARRESTERS FOR 12.47 KV, 8.4 MCOV RISER POLE WITH MOUNTING BRACKET	OHIO BRASS	DYNAVAR MOV PVR
	L101	SURGE ARRESTERS FOR 12.47 KV, 8.4 MCOV DISTRIBUTION CLASS POLE WITH MOUNTING BRACKET	OHIO BRASS	DYNAVAR MOV PDV-100
	L200	RISER POLE LIGHTNING ARRESTORS	OHIO BRASS	221609-7324
	P - POLES			
	P100	SOUTHERN YELLOW PINE TREATED WITH PENTACHLOROPHENOL		45/2
				50-2
				40/2
	S - SWITCHES			
	S100	GANG-OPERATED AIR BREAK TYPE SWITCH, 600AMP, 15kV, DOWN-THE-POLE CONTROL, UNITIZED & PRE-ASSEMBLED	S&C	
	S120	15 KV TYPE M3 DISTRIBUTION CLASS, HOOKSTICK DISCONNECT SWITCH, 15 - 38 KV, 600 AMP WITH POLYMER INSULATORS AND MOUTING HARDWARE	S&C	4942R9
	S130	CUT OUTS, FUSED 100 AMP WITH FUSES	S & C	89021R10-P-CM
	S131	CUT OUTS, FUSED 200 AMP WITH FUSES	S & C	89071R12-P-CM
	S140	POLE MOUTED FUSE MOUNT WITH FUSES 180 DEGREE VERTICAL STYLE	S&C	SM POWER FUSE MOUNTING
	T-TRANSFORMERS			
	T100	TRANSFORMER MOUNTING BRACKET - 1 TRANSFORMER	ALUMAFORM	5M1-9
	T200	TRANSFORMER MOUNTING BRACKET - 2 TRANSFORMERS	ALUMAFORM	10M2-9
	T300	TRANSFORMER MOUNTING BRACKET - 3 TRANSFORMERS	ALUMAFORM	15M3-9
	Z - MISCELLANEOUS MATERIALS			
		GALVANIZING REPAIR PAINT		
		FILLER COMPOUND FOR ALUMINUM TENSION SPLICES		
		WOOD TREATING COMPOUND		
	Z100	PLASTIC U-GARD - 8 FT SECTIONS		
	Z101	UGARD GROUND FITTING		
	Z102	NAILS		

POGGEMEYER DESIGN GROUP, INC.
PLANNERS
ENGINEERS • ARCHITECTS
1168 NORTH MAIN STREET • (419) 352-7537 • BOWLING GREEN, OHIO 43402

LUCAS COUNTY MAUMEE RIVER WASTEWATER TREATMENT PLANT ELECTRIC POLE REPAIR

MATERIAL LIST

DRAWN BY	CHECKED BY
G.N.C.	D.L.K.

REVISION
03/31/2015
ISSUED FOR BID

ML1
OF

JOB NUMBER
3063-003

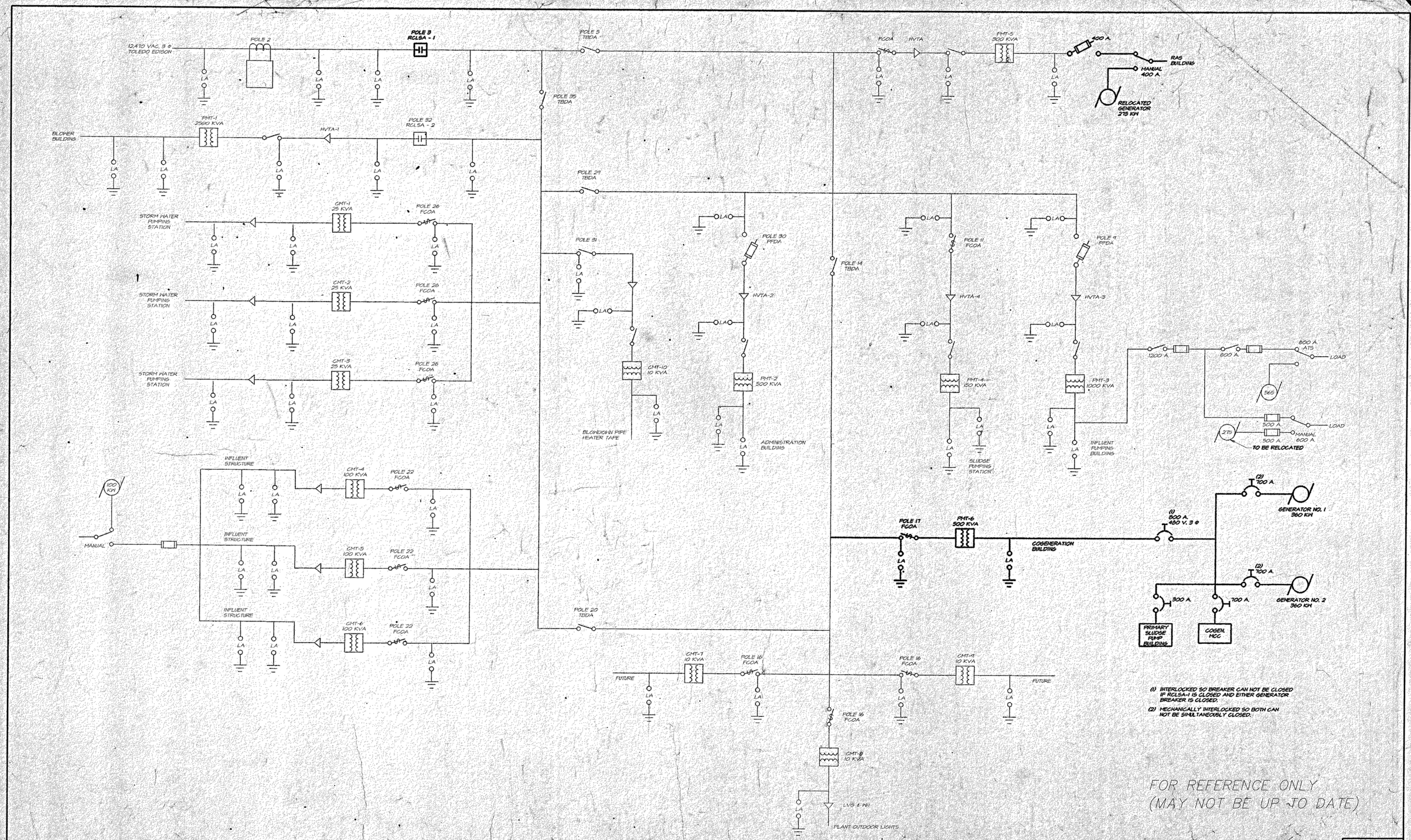

(1) INTERLOCKED SO BREAKER CAN NOT BE CLOSED IF RCLSA-1 IS CLOSED AND EITHER GENERATOR BREAKER IS CLOSED.

(2) MECHANICALLY INTERLOCKED SO BOTH CAN NOT BE SIMULTANEOUSLY CLOSED.

FOR REFERENCE ONLY
(MAY NOT BE UP TO DATE)

REV. NO.	DESCRIPTION	DATE	BY	APP'D

FINKBEINER, PETTIS & STROUT, LTD.
CONSULTING ENGINEERS
TOLEDO · AKRON
OHIO

SCALE: NONE
DESIGNED BY: R.H.S.
DRAWN BY: T.R.C
CHECKED BY: R.D.T.

PRIMARY ONE-LINE
IMPROVEMENTS TO THE MAUMEE RIVER WASTEWATER TREATMENT PLANT
LUCAS COUNTY, OHIO

CAD NUMBER: LUCXX001
PROJECT NUMBER: LUCS 204 B
SECTION: B
DATE: 5-21-93
E-27 OF E-50

9-9-93